Güven Teknik Makina ve Kalıp Ind.Trade.Co.Ltd.
Kavaklı Mah. Pamukova Sok. No:6 Silivri/İstanbul/Turkey
+90 212 485 09 67
info@guventeknikmakina.com

GT8065M

Thermoform Machine



Elektrik Besleme / Electrical Supply :	380V AC
Frekans / Frequency :	50 Hz
Besleme Kablosu / Supply Cable :	Minumum 5x120 mm² (3P + N + PE)
Toplam Güç / Total Power :	GT8065M : 346.4 kW
Isıtıcı Gücü / Heaters Power :	GT8065M : 298.8 kw
Ana Şalter / Main Circuit Breaker :	Schneider LV540305

Cable Color Codes

AC Phase : Black	*General 24V DC : Brown*	*Control UPS 24V DC : Violet*	*Brake UPS 334V DC : Red*
AC Neutral : Blue	*General 0V DC : Green*	*Control UPS 0V DC : Green*	*Brake UPS 0V DC : Gray*
Earth : Yellow-Green			

Project Version : v0.2
Last Update : 20/01/2025

Number of pages 42

EN

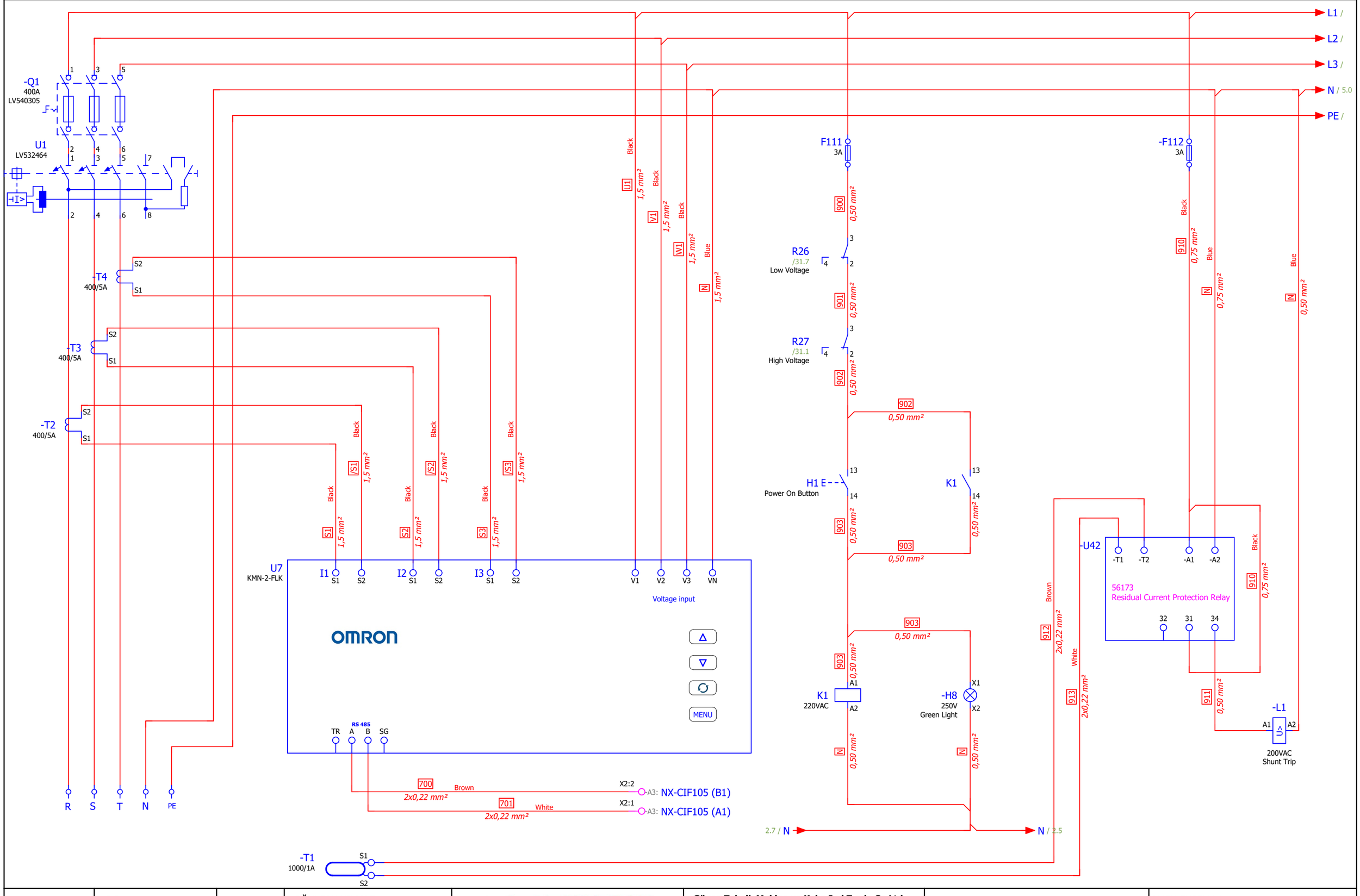

Project Version	v0.2	Author	OĞULCAN YILMAZ	GT FORM	**Güven Teknik Makina ve Kalıp Ind.Trade.Co.Ltd** Kavaklı Mah. Pamukova Sok. No:6 Silivri/İstanbul/Turkey +90 212 485 09 67 info@guventeknikmakina.com	**GT8065M**	MAIN SUPPLY-1
Last Update	20/01/2025	Revision					Page : 2 /42

/ L1 → L1 /
/ L2 → L2 /
/ L3 → L3 /
2.9 / PE → PE / 4.0

16 mm² 16 mm² 16 mm²

K1
95A
1/L1 3/L2 5/L3
2/T1 4/T2 6/T3

16 mm² 16 mm² 16 mm²

Choke Transformatör
U3
115A
-L1

MAIN MOTOR DRIVER HARMONY FILTER
-V1

10 mm² → NF-L1 / 3.6
10 mm² → NF-L2 / 3.6
10 mm² → NF-L3 / 3.6
10 mm²

MAIN MOTOR DRIVER BUS

PLUG MOTOR DRIVER HARMONY FILTER
-V2

10 mm² → NF-L1 / 3.6
10 mm² → NF-L2 / 3.6
10 mm² → NF-L3 / 3.6
10 mm²

PLUG MOTOR DRIVER BUS

INVTER HARMONY FILTER
-V3

10 mm² → NF-L1 / 14.0
10 mm² → NF-L2 / 14.0
10 mm² → NF-L3 / 14.0
10 mm²

INVERTERS

16 mm² → SK-L1 / 4.0
16 mm² → SK-L2 / 4.0
16 mm² → SK-L3 / 4.0

POWER SUPPLY AND STACKER GROUP

Project Version	v0.2	Author	OĞULCAN YILMAZ	GT FORM	**Güven Teknik Makina ve Kalıp Ind.Trade.Co.Ltd** Kavaklı Mah. Pamukova Sok. No:6 Silivri/İstanbul/Turkey +90 212 485 09 67 info@guventeknikmakina.com	**GT8065M**	MAIN SUPPLY -2
Last Update	20/01/2025	Revision					Page : 3 /42

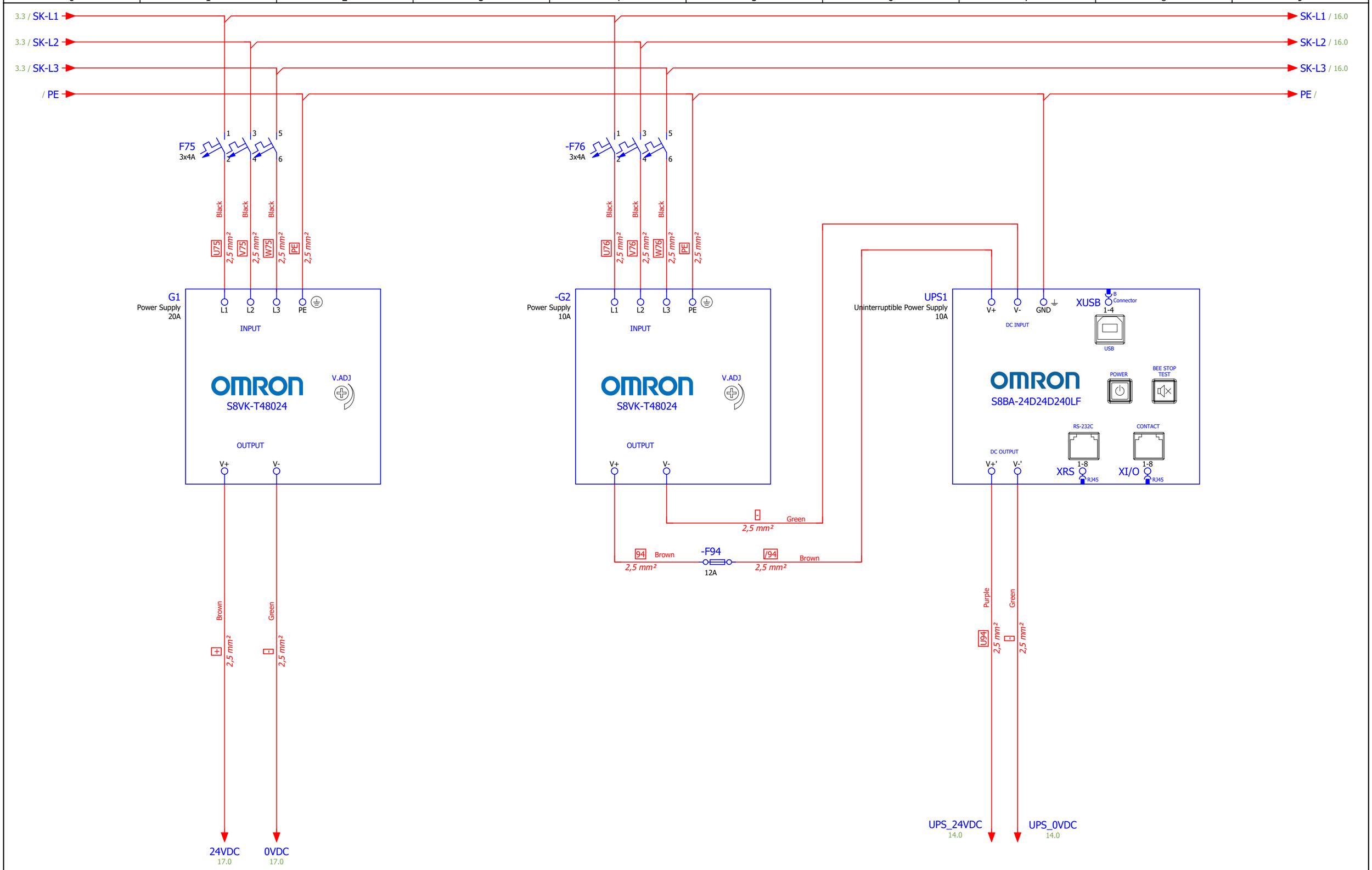

Project Version	v0.2	Author	OĞULCAN YILMAZ	GT FORM	**Güven Teknik Makina ve Kalıp Ind.Trade.Co.Ltd** Kavaklı Mah. Pamukova Sok. No:6 Silivri/İstanbul/Turkey +90 212 485 09 67 info@guventeknikmakina.com	**GT8065M**	CONTROL SUPPLY
Last Update	20/01/2025	Revision					Page : 4 /42

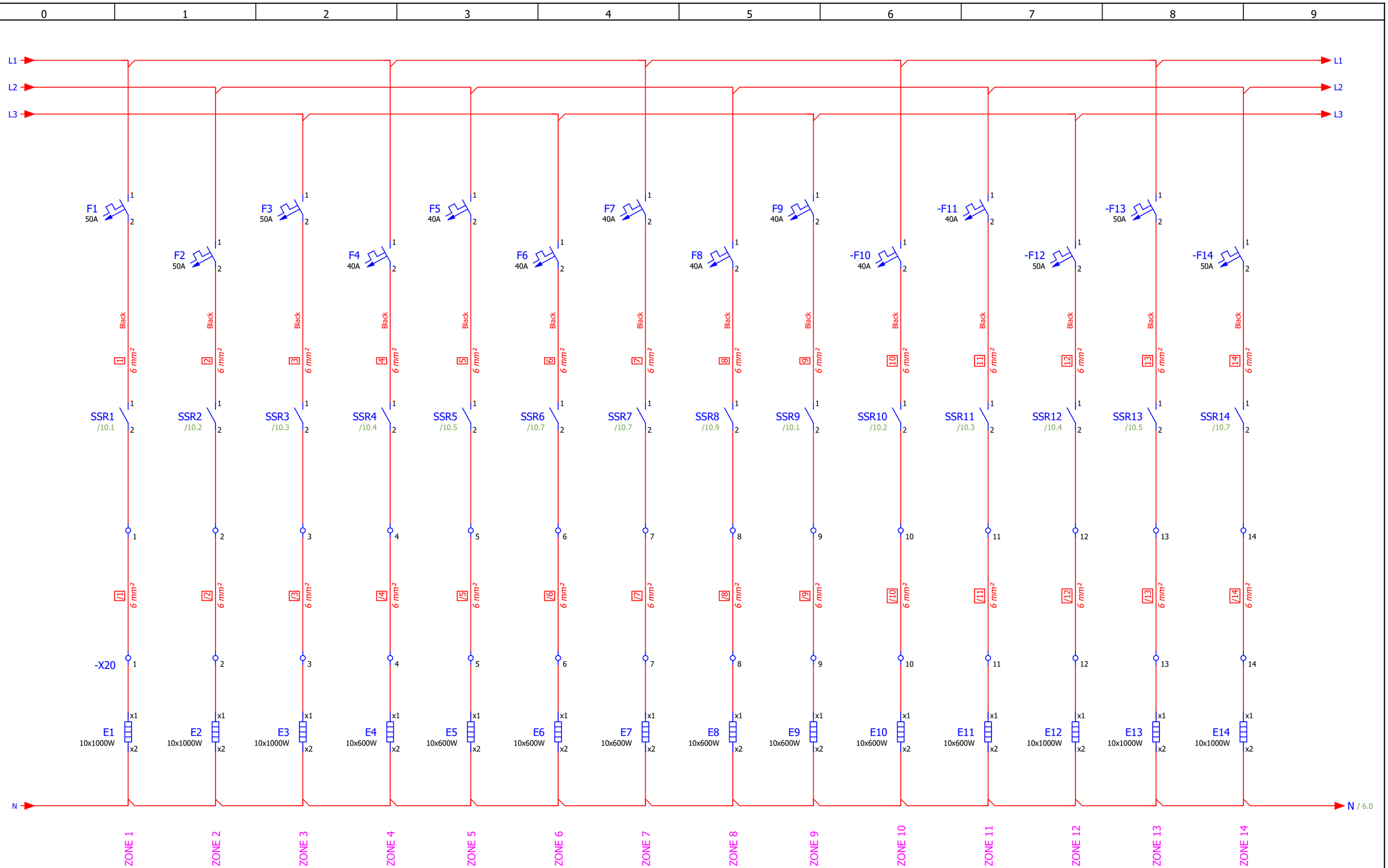

Project Version	v0.2	Author	OĞULCAN YILMAZ	GT FORM	**Güven Teknik Makina ve Kalıp Ind.Trade.Co.Ltd** Kavaklı Mah. Pamukova Sok. No:6 Silivri/İstanbul/Turkey +90 212 485 09 67 info@guventeknikmakina.com	**GT8065M**	UPPER HEATERS FLAT
Last Update	20/01/2025	Revision					Page : 5 /42

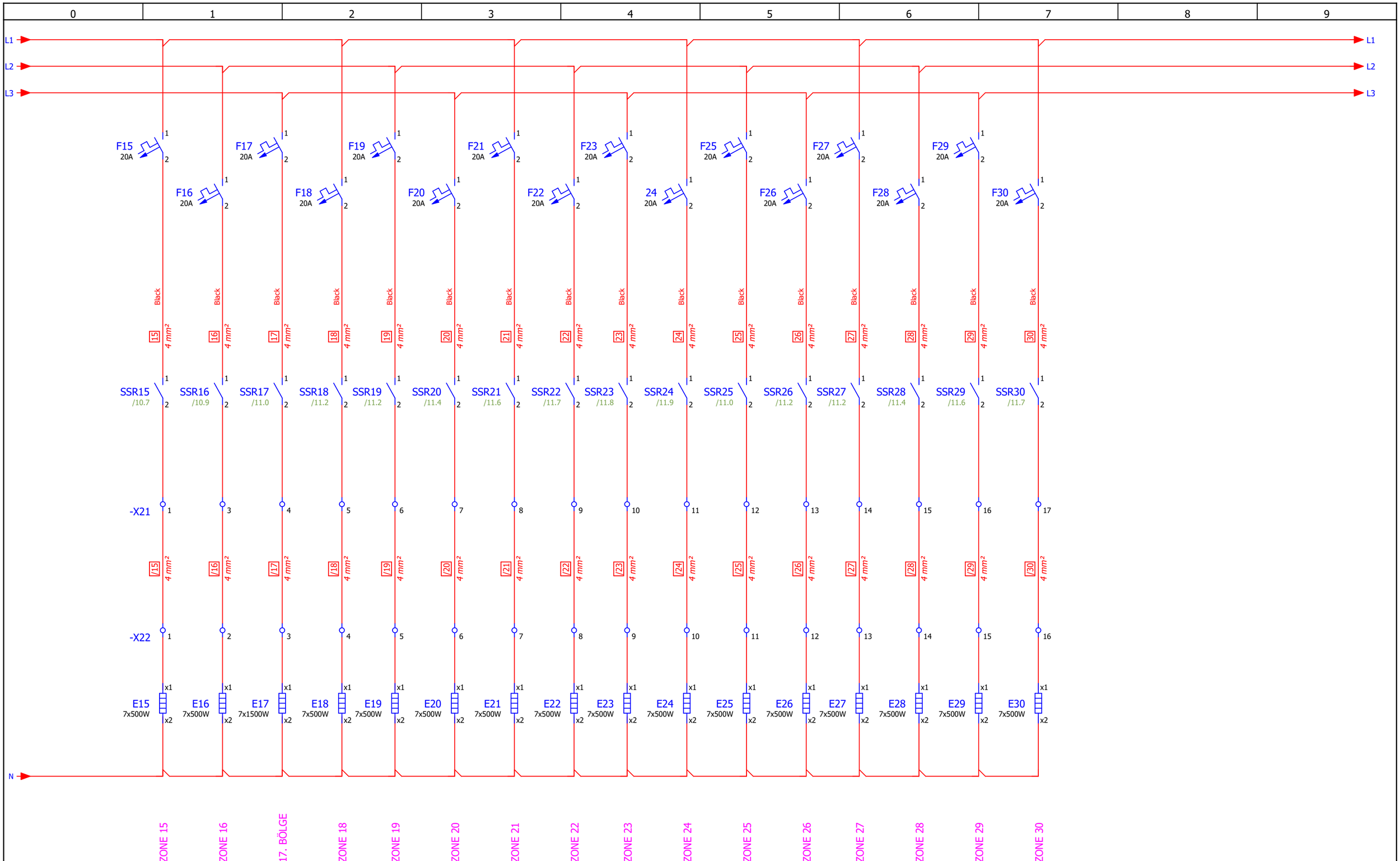

Project Version	v0.2	Author	OĞULCAN YILMAZ	GT FORM	**Güven Teknik Makina ve Kalıp Ind.Trade.Co.Ltd** Kavaklı Mah. Pamukova Sok. No:6 Silivri/İstanbul/Turkey +90 212 485 09 67 info@guventeknikmakina.com	**GT8065M**	UPPER HEATERS CROSS
Last Update	20/01/2025	Revision					Page : 6 /42

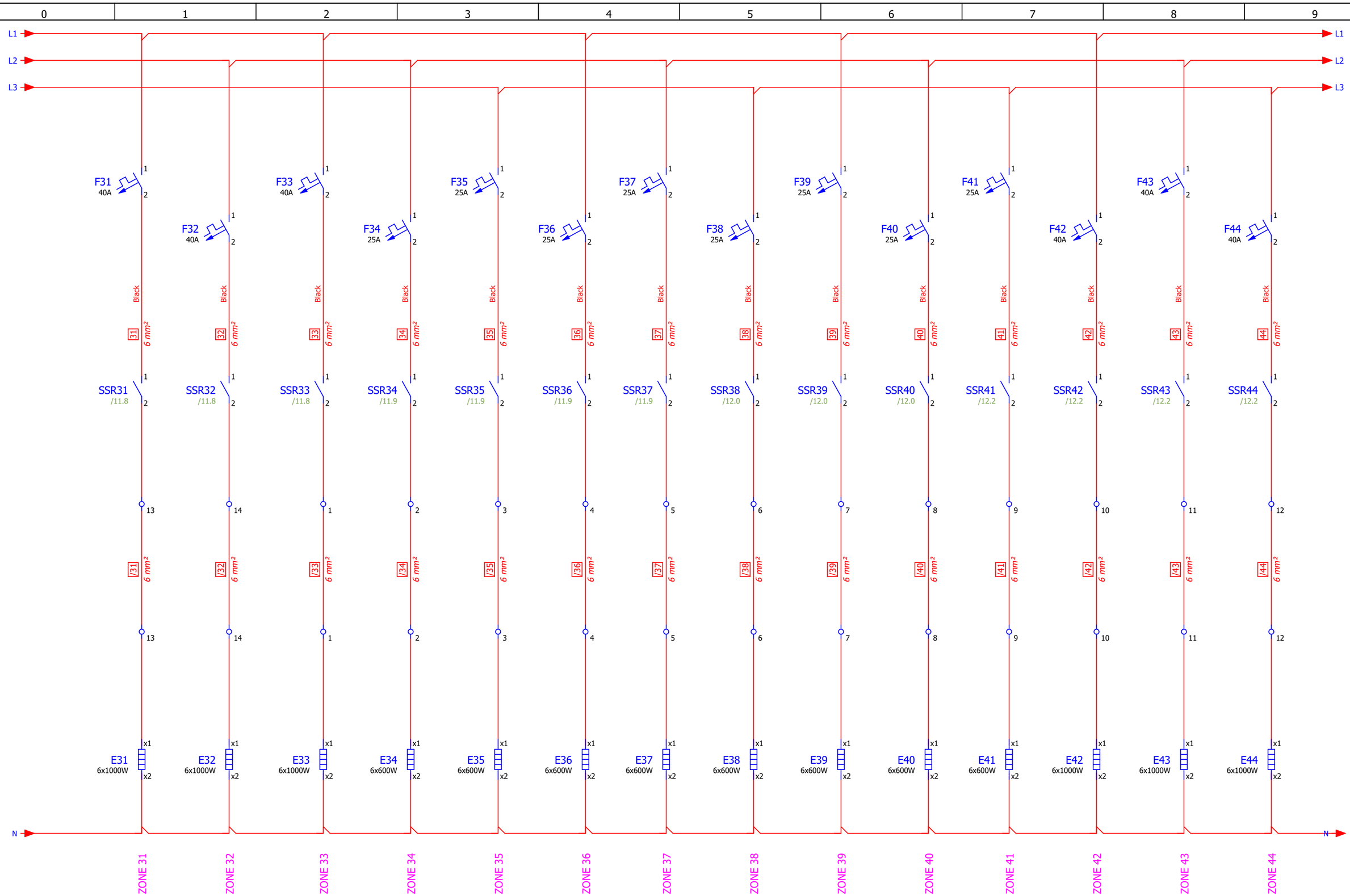

Project Version	v0.2	Author	OĞULCAN YILMAZ	GT FORM	**Güven Teknik Makina ve Kalıp Ind.Trade.Co.Ltd** Kavaklı Mah. Pamukova Sok. No:6 Silivri/İstanbul/Turkey +90 212 485 09 67 info@guventeknikmakina.com	**GT8065M**	LOWER HEATERS FLAT
Last Update	20/01/2025	Revision					Page : 7 /42

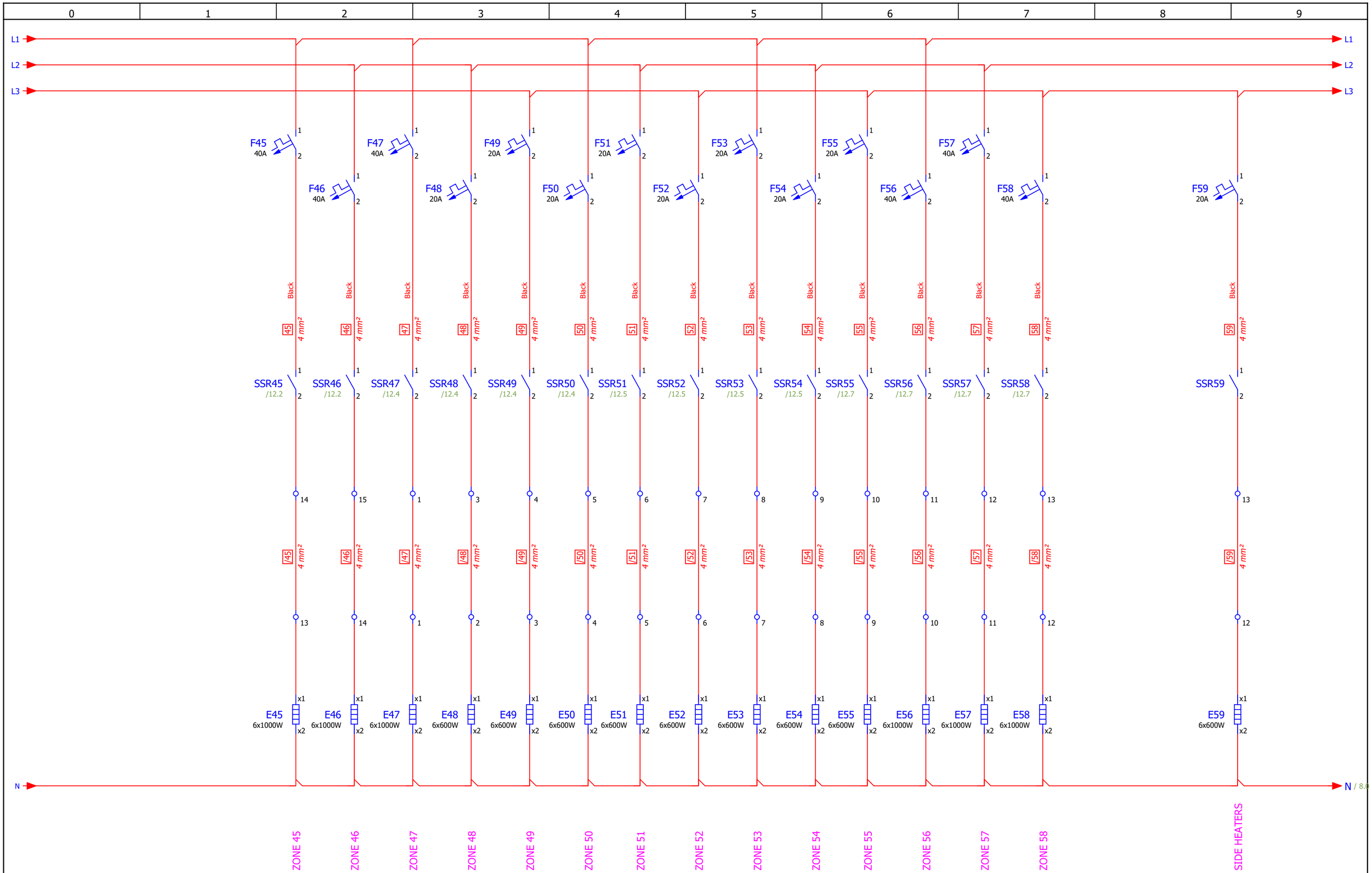

Project Version	v0.2	Author	OĞULCAN YILMAZ	GT FORM	**Güven Teknik Makina ve Kalıp Ind.Trade.Co.Ltd** Kavaklı Mah. Pamukova Sok. No:6 Silivri/İstanbul/Turkey +90 212 485 09 67 info@guventeknikmakina.com	**GT8065M**	ALT TAVA ÇAPRAZ
Last Update	20/01/2025	Revision					Page : 8 /42

9.9 / N

N / 90

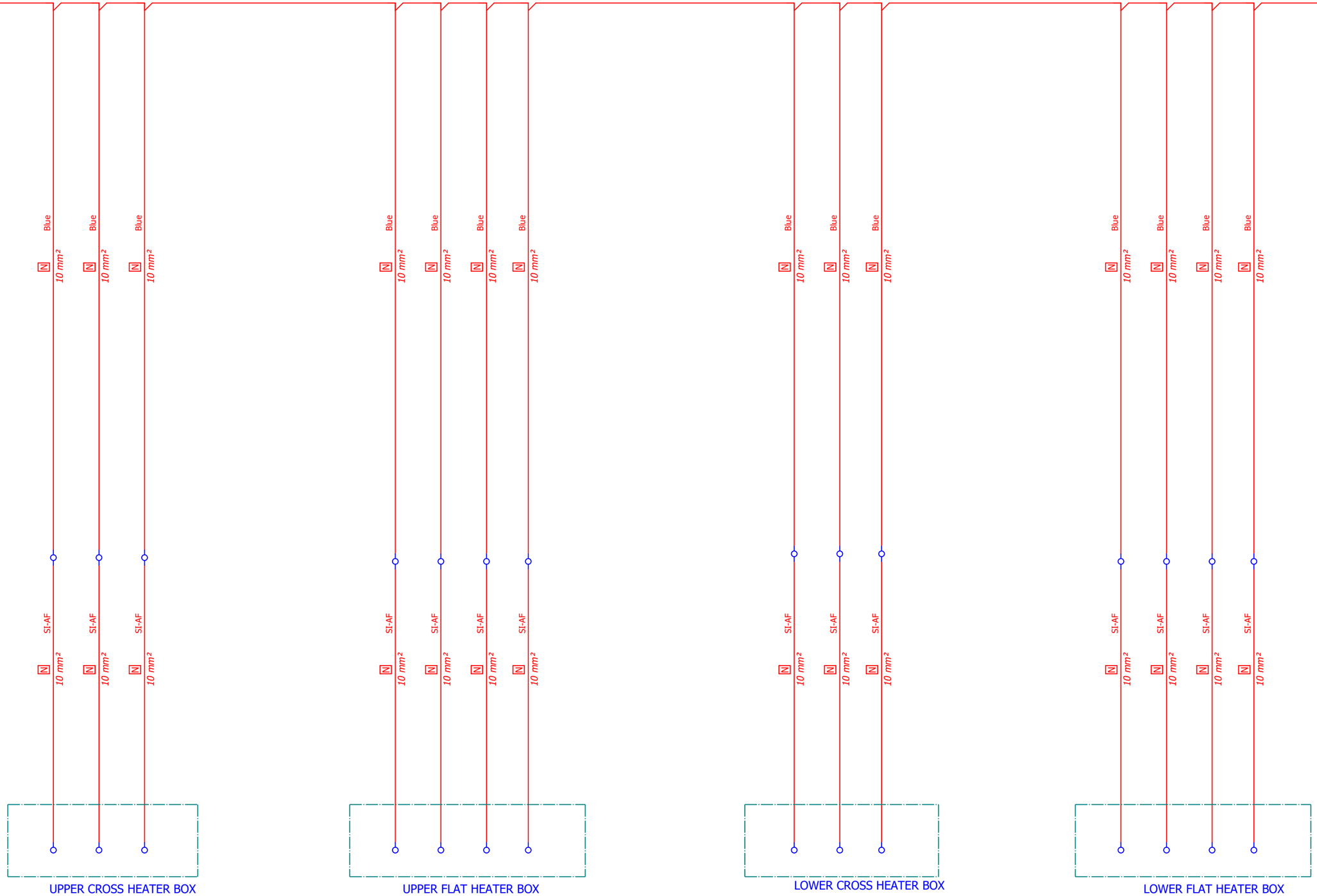

Project Version	v0.2	Author	OĞULCAN YILMAZ	GT FORM	**Güven Teknik Makina ve Kalıp Ind.Trade.Co.Ltd** Kavaklı Mah. Pamukova Sok. No:6 Silivri/İstanbul/Turkey +90 212 485 09 67 info@guventeknikmakina.com	**GT8065M**	HEATERS NEUTRAL
Last Update	20/01/2025	Revision					Page : 9 /42

0	1	2	3	4	5	6	7	8	9

TC1
NX-TC3405
MODULE 1

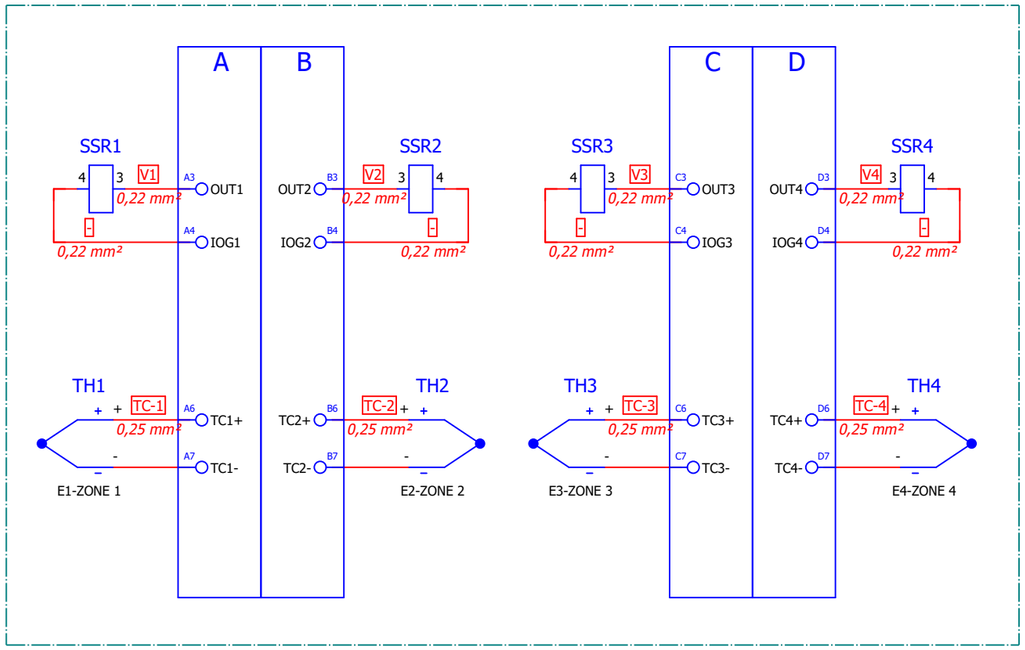

TC2
NX-TC3405
MODULE 2

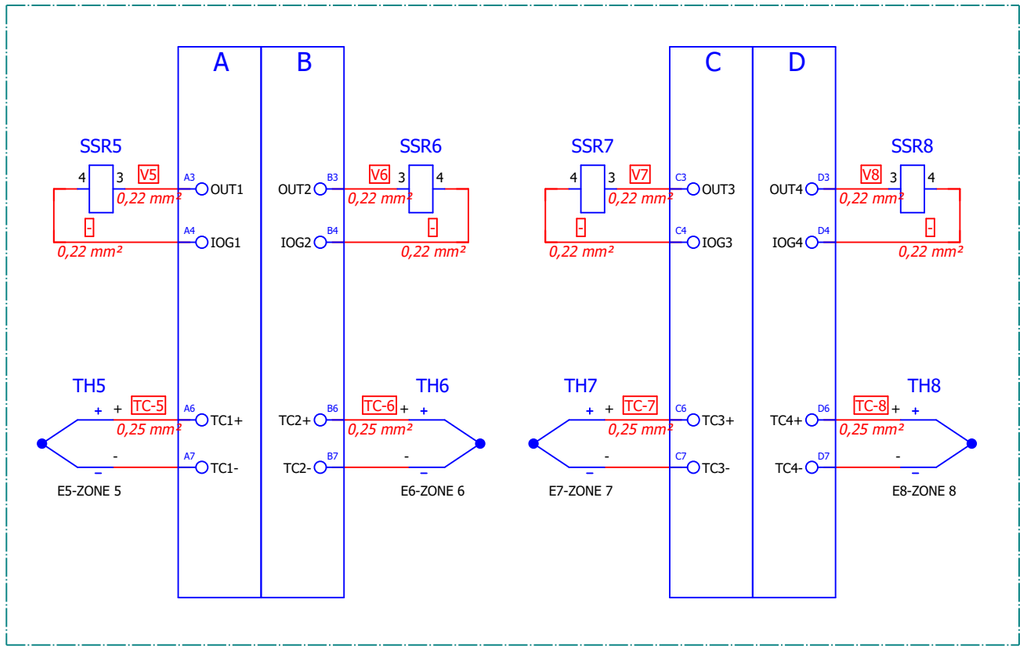

TC3
NX-TC3405
MODULE 3

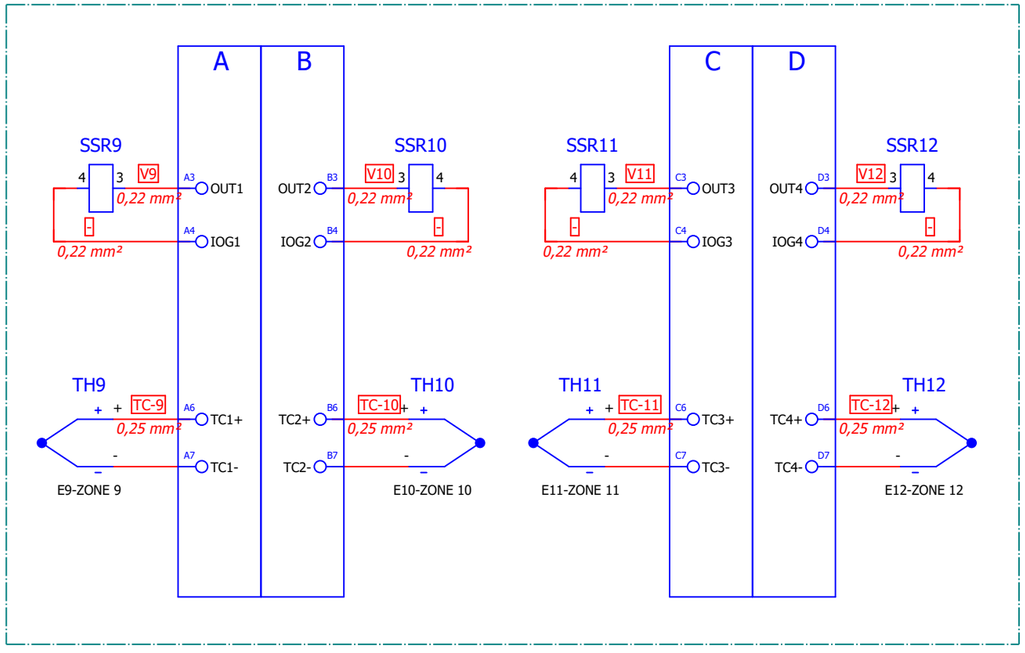

TC4
NX-TC3405
MODULE 4

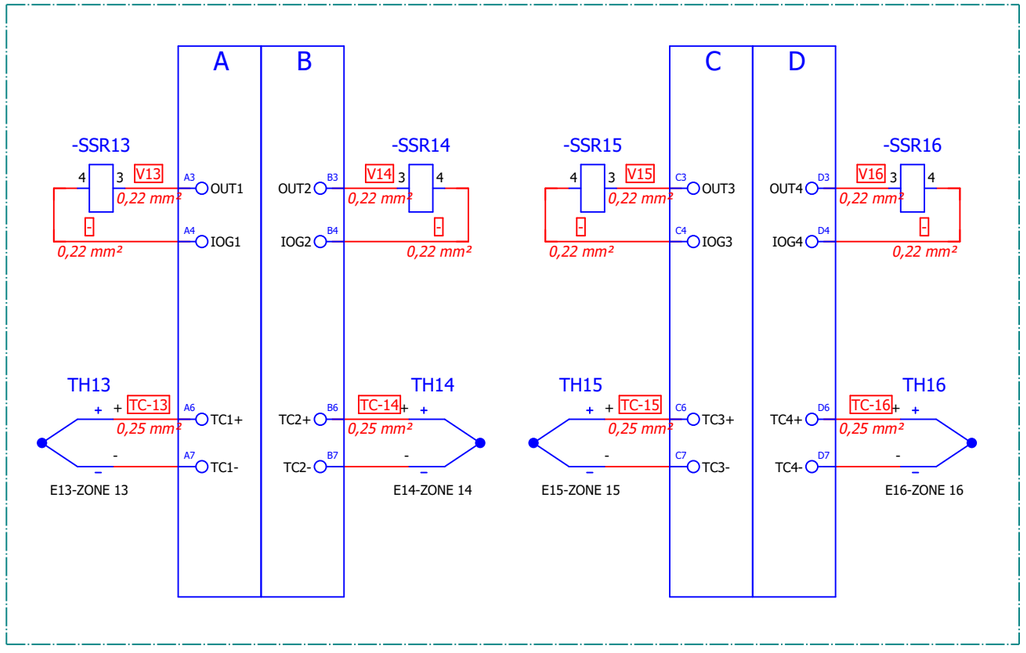

Project Version	v0.2	Author	OĞULCAN YILMAZ	GT FORM	**Güven Teknik Makina ve Kalıp Ind.Trade.Co.Ltd** Kavaklı Mah. Pamukova Sok. No:6 Silivri/İstanbul/Turkey +90 212 485 09 67 info@guventeknikmakina.com	**GT8065M**	TEMPERATURE CONTROL-1
Last Update	20/01/2025	Revision					Page : 10 /42

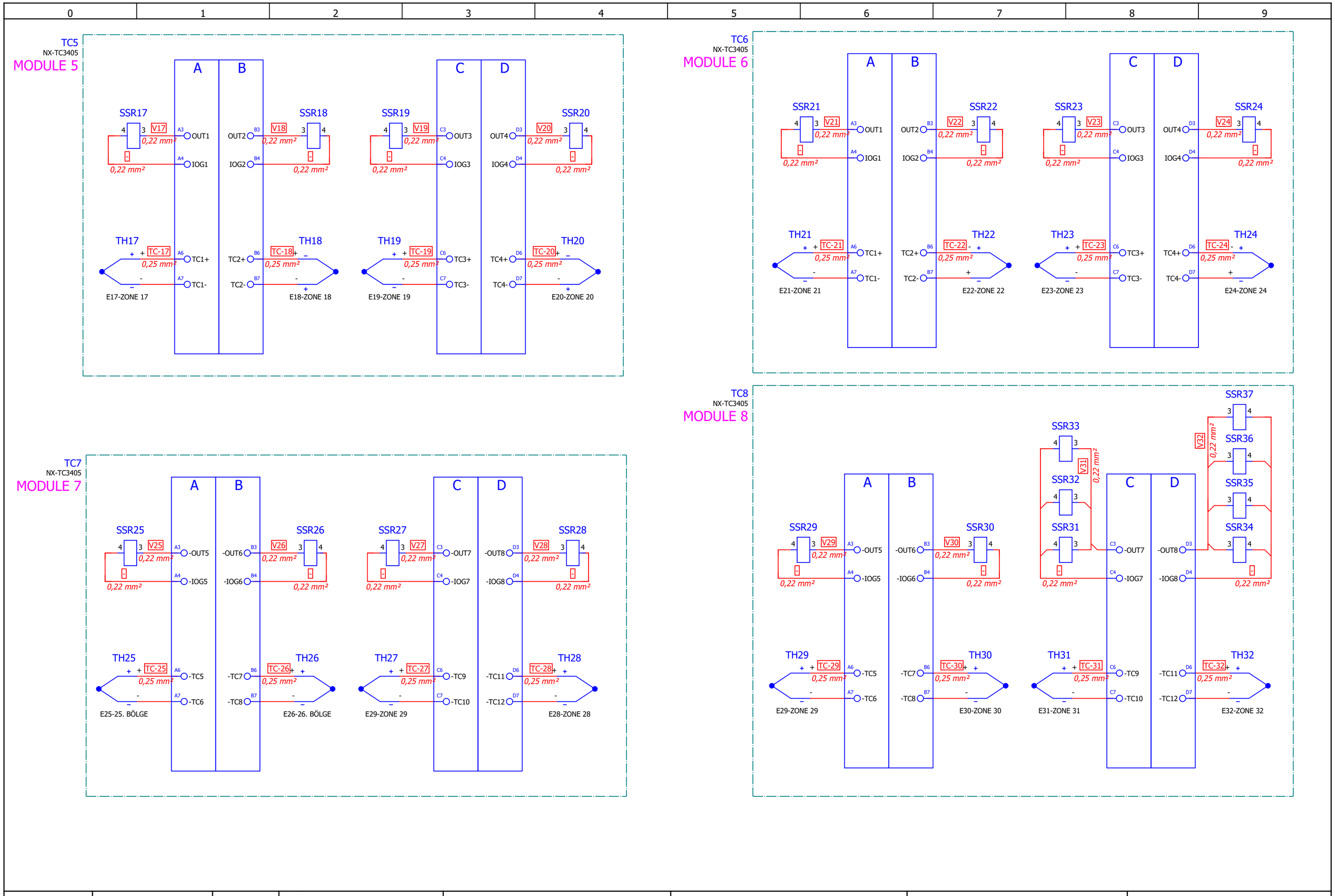

Project Version	v0.2	Author	OĞULCAN YILMAZ	GT FORM	**Güven Teknik Makina ve Kalıp Ind.Trade.Co.Ltd** Kavaklı Mah. Pamukova Sok. No:6 Silivri/İstanbul/Turkey +90 212 485 09 67 info@guventeknikmakina.com	**GT8065M**	TEMPERATURE CONTROL-2
Last Update	20/01/2025	Revision					Page : 11 /42

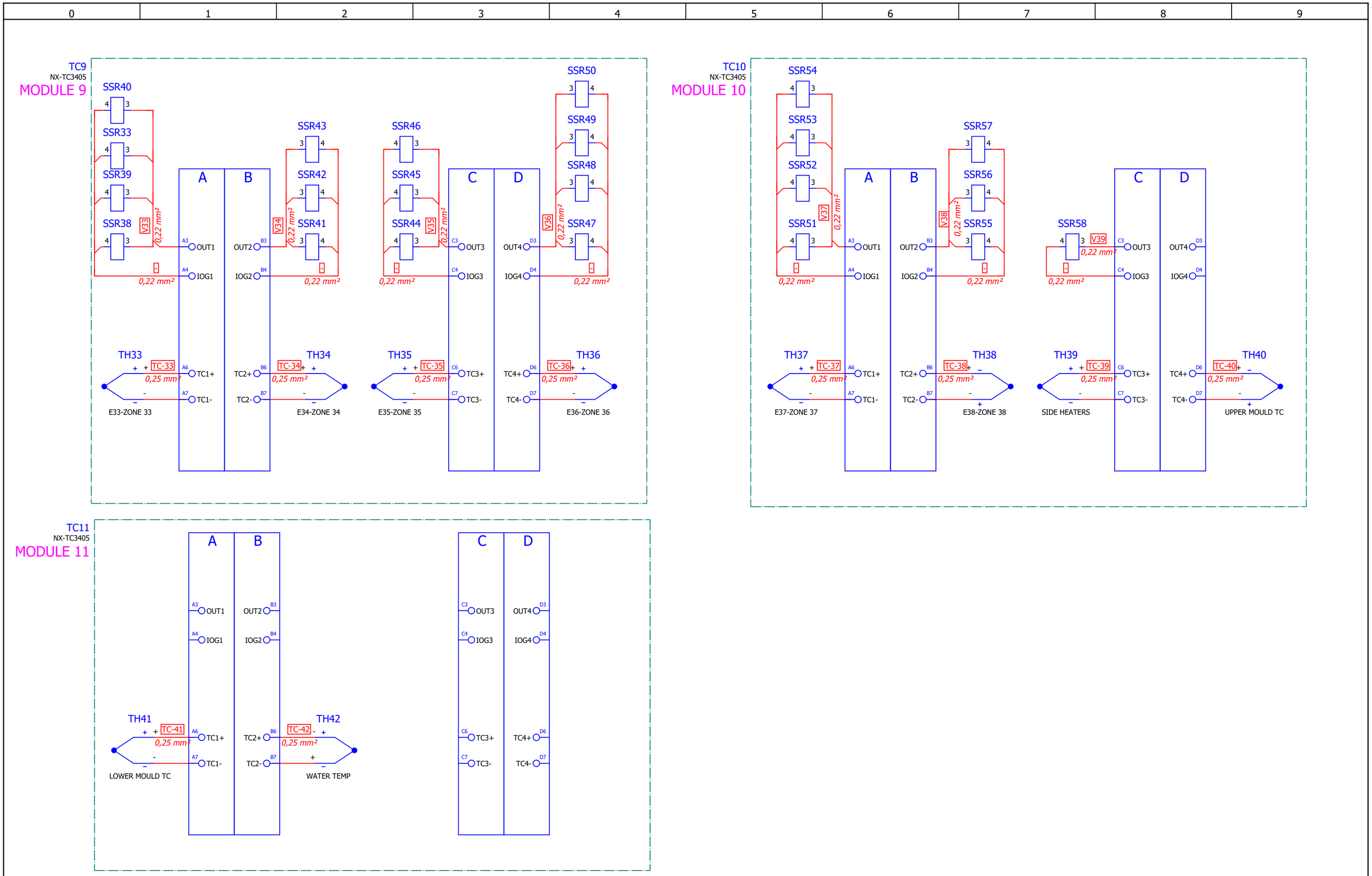

Project Version	v0.2	Author	OĞULCAN YILMAZ	GT FORM	**Güven Teknik Makina ve Kalıp Ind.Trade.Co.Ltd** Kavaklı Mah. Pamukova Sok. No:6 Silivri/İstanbul/Turkey +90 212 485 09 67 info@guventeknikmakina.com	**GT8065M**	ISI KONTROL -3
Last Update	20/01/2025	Revision					Page : 12 /42

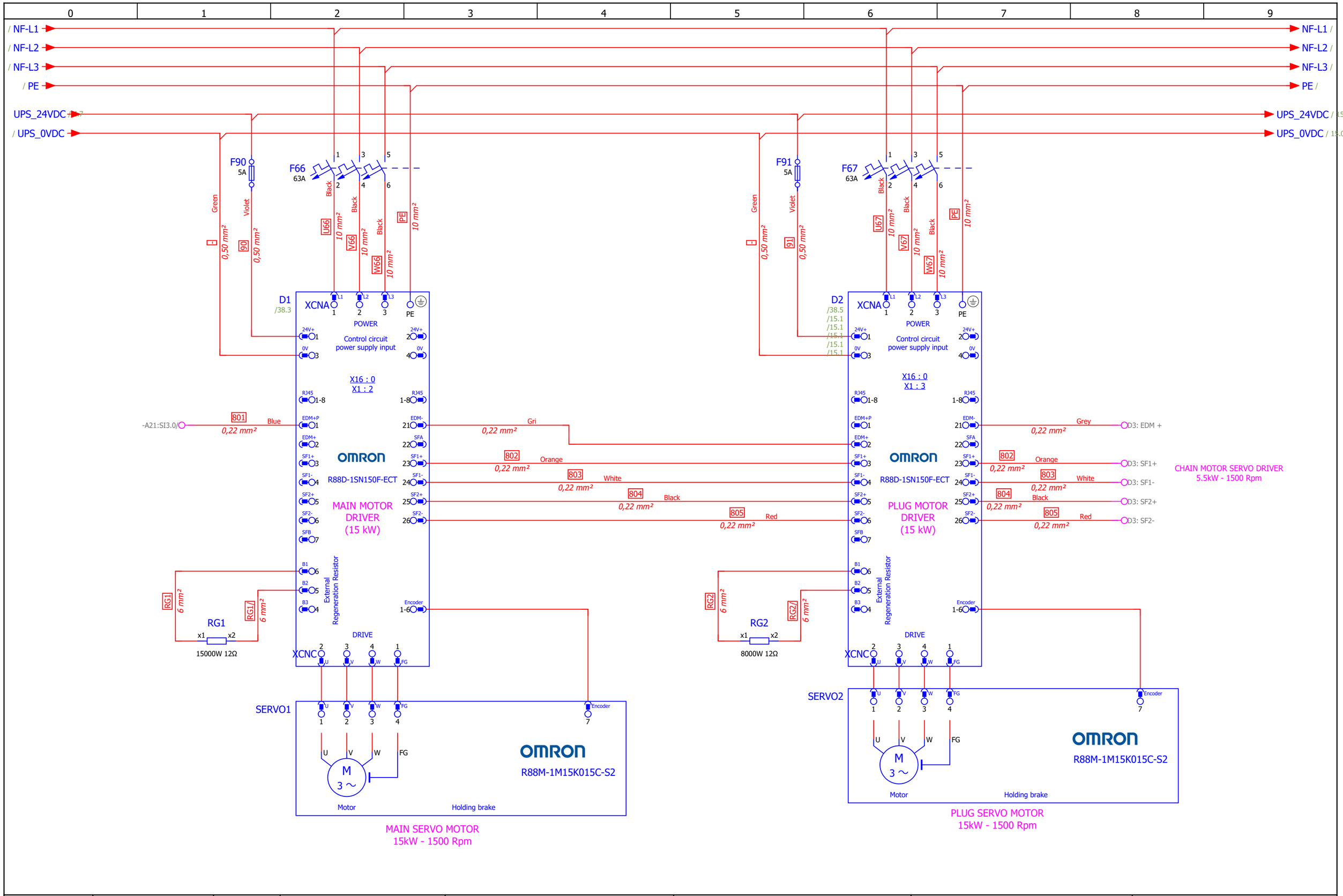

Project Version	v0.2	Author	OĞULCAN YILMAZ	GT FORM	**Güven Teknik Makina ve Kalıp Ind.Trade.Co.Ltd** Kavaklı Mah. Pamukova Sok. No:6 Silivri/İstanbul/Turkey +90 212 485 09 67 info@guventeknikmakina.com	**GT8065M**	SERVO -1
Last Update	20/01/2025	Revision					Page : 13 /42

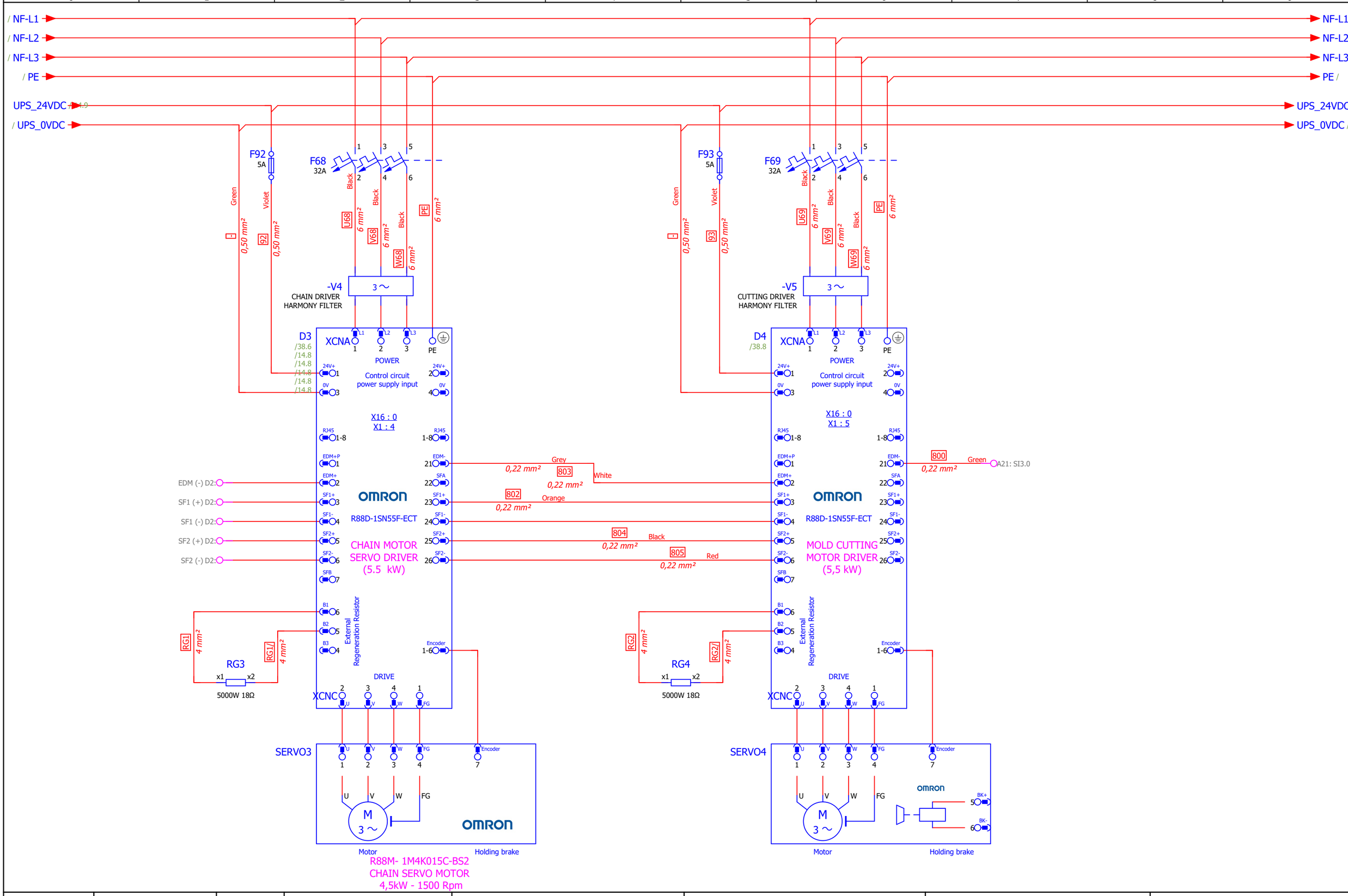

Project Version	v0.2	Author	OĞULCAN YILMAZ	GT FORM	**Güven Teknik Makina ve Kalıp Ind.Trade.Co.Ltd** Kavaklı Mah. Pamukova Sok. No:6 Silivri/İstanbul/Turkey +90 212 485 09 67 info@guventeknikmakina.com	**GT8065M**	SERVO -2
Last Update	20/01/2025	Revision					Page : 14 /42

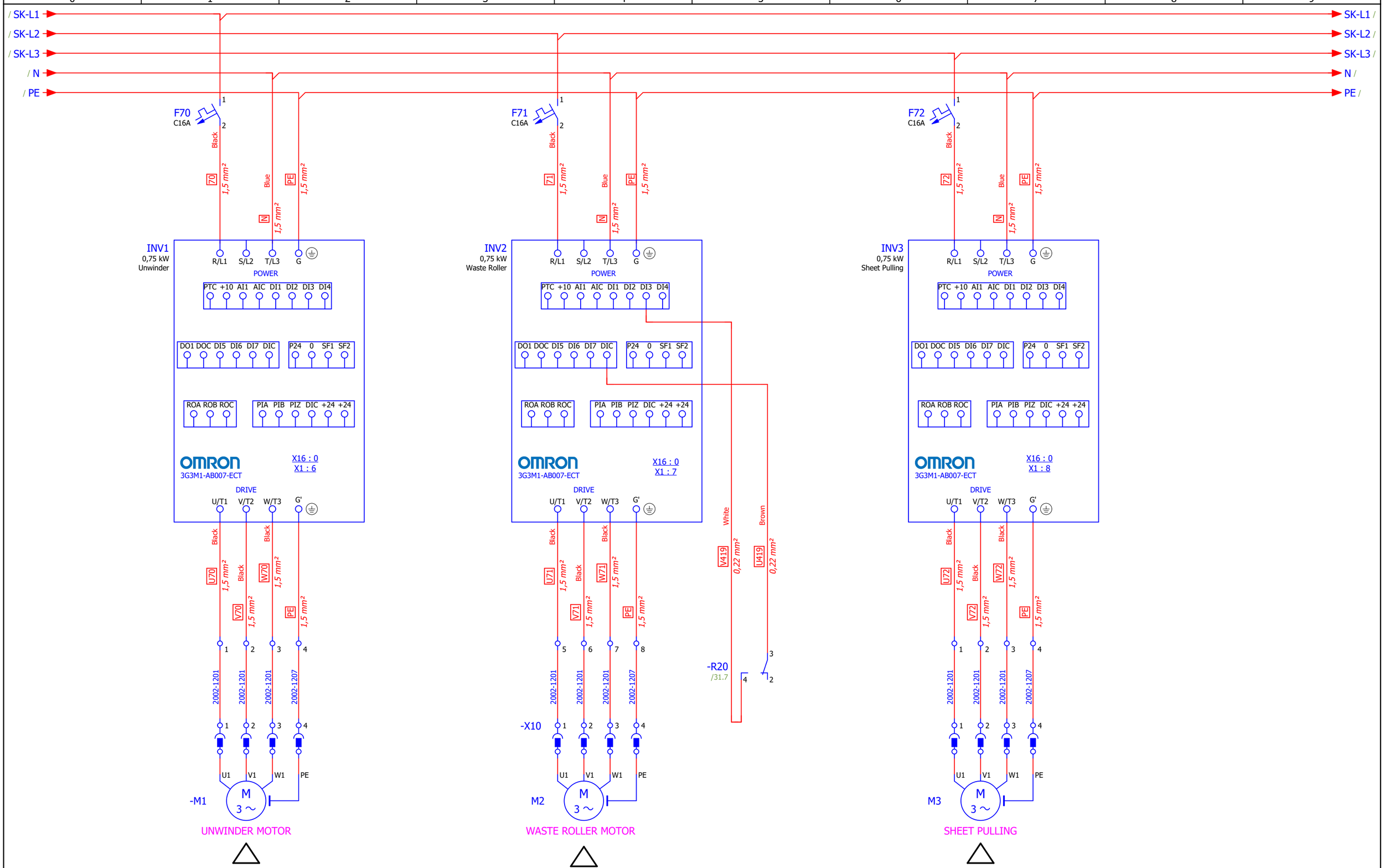

Project Version	v0.2	Author	OĞULCAN YILMAZ	GT FORM	**Güven Teknik Makina ve Kalıp Ind.Trade.Co.Ltd** Kavaklı Mah. Pamukova Sok. No:6 Silivri/İstanbul/Turkey +90 212 485 09 67 info@guventeknikmakina.com	**GT8065M**	FREQUENCY INVERTER -1
Last Update	20/01/2025	Revision					Page : 15 /42

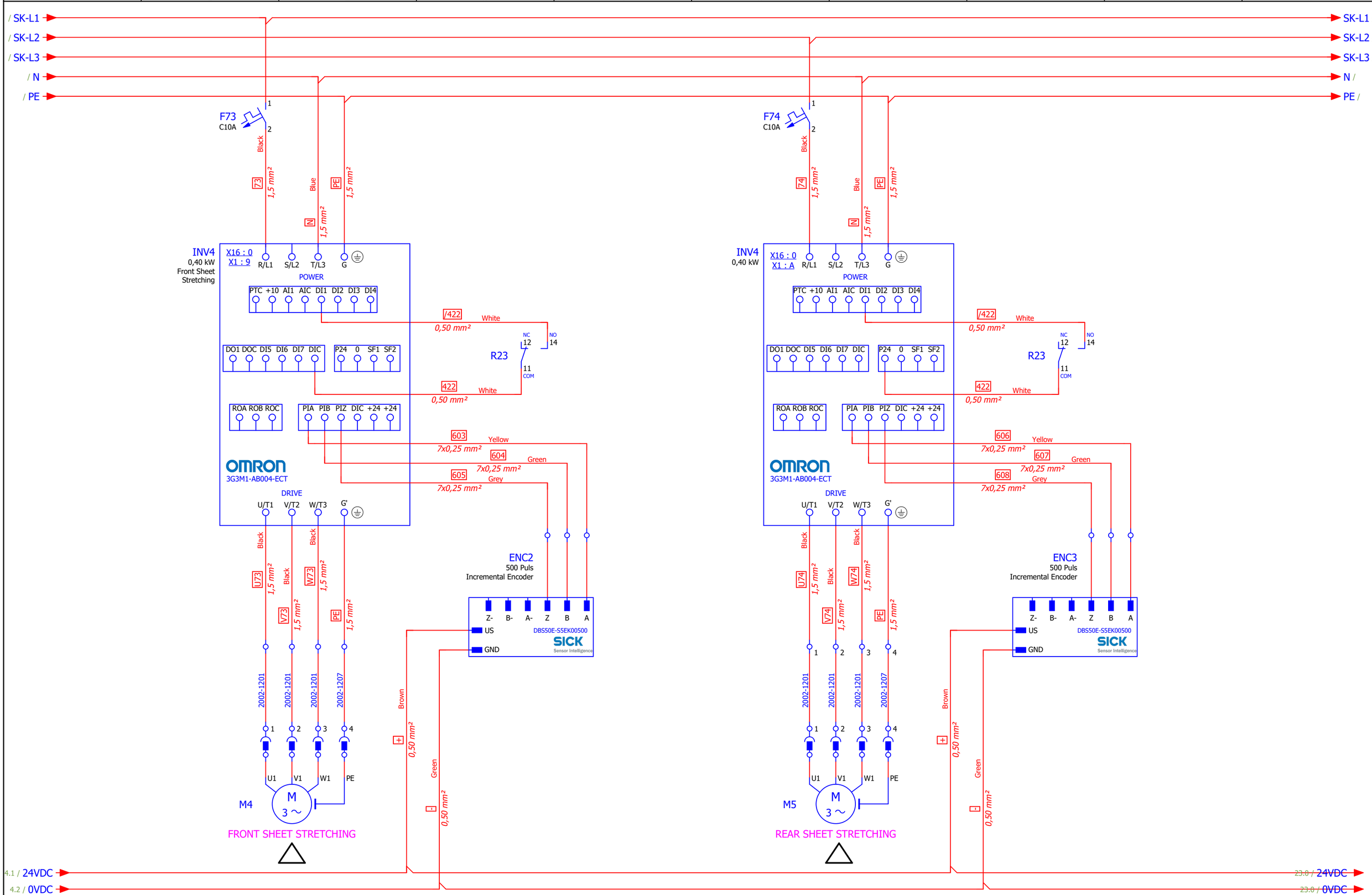

Project Version	v0.2	Author	OĞULCAN YILMAZ	GT FORM	**Güven Teknik Makina ve Kalıp Ind.Trade.Co.Ltd** Kavaklı Mah. Pamukova Sok. No:6 Silivri/İstanbul/Turkey +90 212 485 09 67 info@guventeknikmakina.com	**GT8065M**	FREQUENCY INVERTER -2
Last Update	20/01/2025	Revision					Page : 16 /42

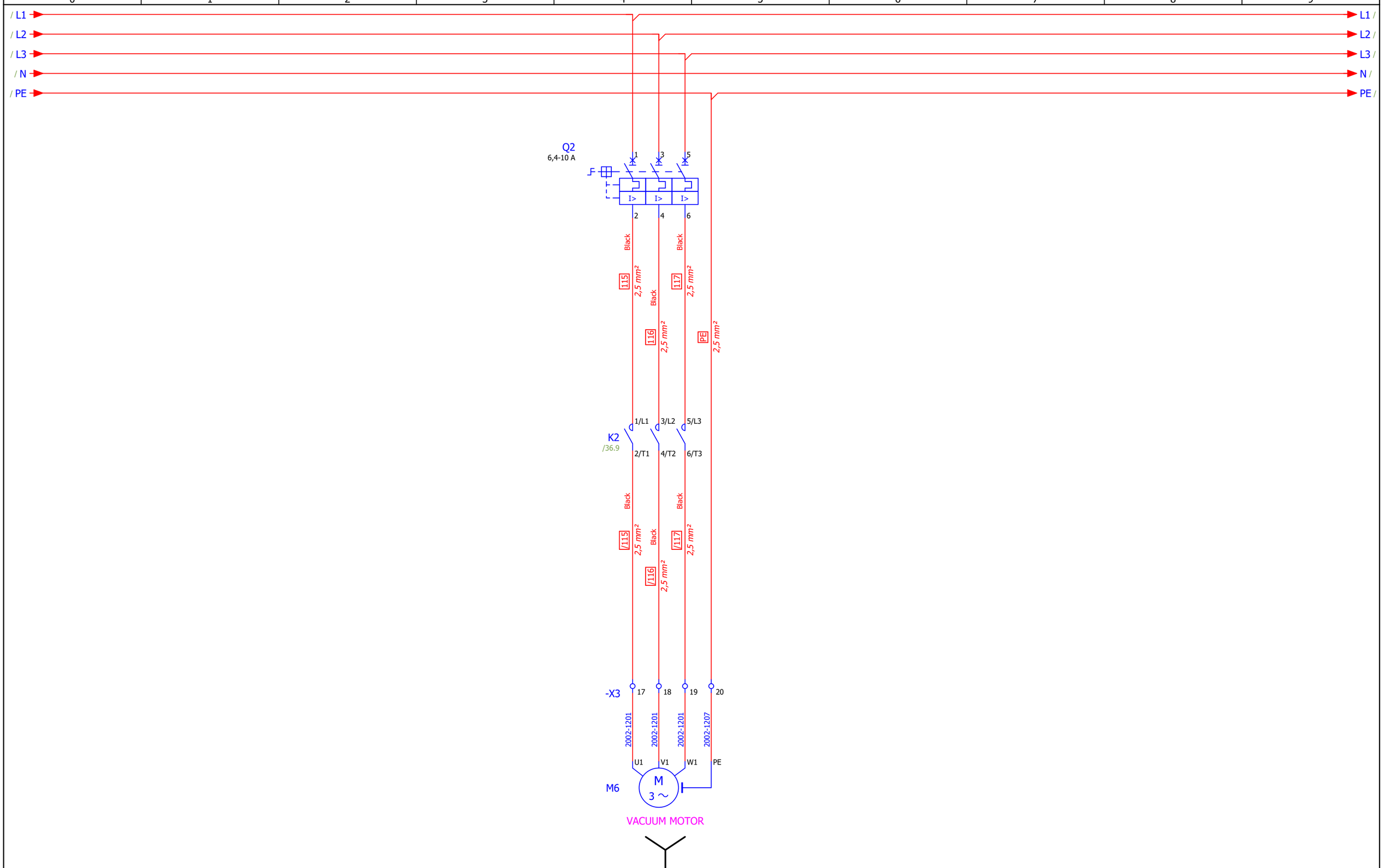

Project Version	v0.2	Author	OĞULCAN YILMAZ	GT FORM	**Güven Teknik Makina ve Kalıp Ind.Trade.Co.Ltd** Kavaklı Mah. Pamukova Sok. No:6 Silivri/İstanbul/Turkey +90 212 485 09 67 info@guventeknikmakina.com	**GT8065M**	AC MOTORS
Last Update	20/01/2025	Revision					Page : 17 /42

/ L1 / L2 / L3 / N / PE

L1 / L2 / L3 / N / PE

F77 32A 1 2

F78 6A 1 2

F79 4A 1 2

Black 77 2,5 mm²

Blue N 2,5 mm²

PE 2,5 mm²

Black 78 1 mm²

Blue N 1 mm²

Black 79 1,5 mm²

Blue N 1,5 mm²

PE 1,5 mm²

U4
/28.8
/28.1
DTS6301C
230V AC
L1 N PE
-X50

-X54
1 2 3 4 5 6

ELECTRICAL PANEL
AIR CONDITIONER

H100 x1 x2
ELECTRICAL PANEL
LIGHT

H101 x1 x2
/19.3
MACHINE LIGHT - 1

H102 x1 x2
/19.3
MACHINE LIGHT - 2

H101 x1 x2
/19.3
MACHINE LIGHT - 3

H102 x1 x2
/19.3
MACHINE LIGHT - 4

-XD1
JACK
1 2 PE

Project Version	v0.2	Author	OĞULCAN YILMAZ	GT FORM	**Güven Teknik Makina ve Kalıp Ind.Trade.Co.Ltd** Kavaklı Mah. Pamukova Sok. No:6 Silivri/İstanbul/Turkey +90 212 485 09 67 info@guventeknikmakina.com	**GT8065M**	AC DEVICES-1
Last Update	20/01/2025	Revision					Page : 18 /42

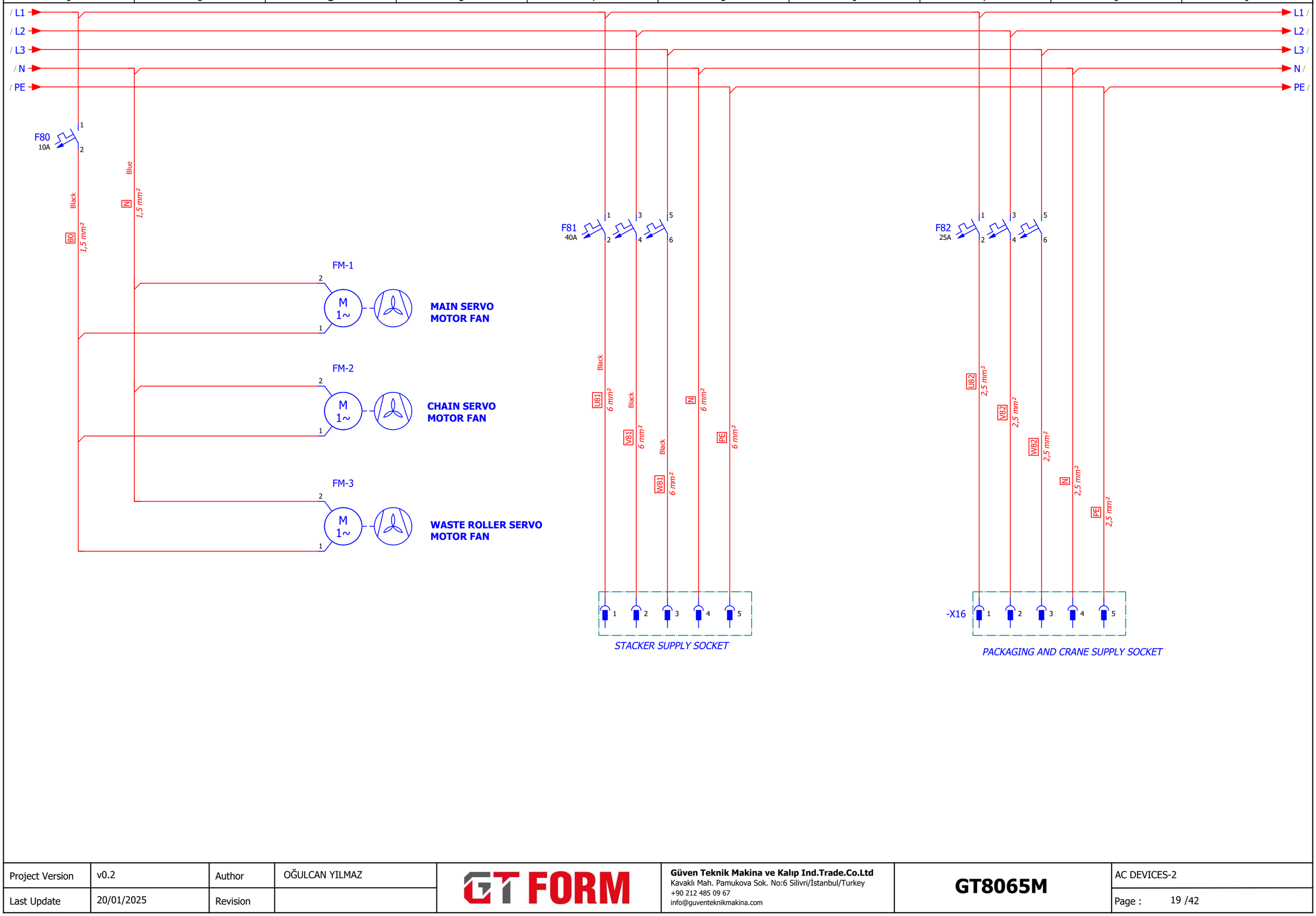

Project Version	v0.2	Author	OĞULCAN YILMAZ	GT FORM	**Güven Teknik Makina ve Kalıp Ind.Trade.Co.Ltd** Kavaklı Mah. Pamukova Sok. No:6 Silivri/İstanbul/Turkey +90 212 485 09 67 info@guventeknikmakina.com	**GT8065M**	AC DEVICES-2
Last Update	20/01/2025	Revision					Page : 19 /42

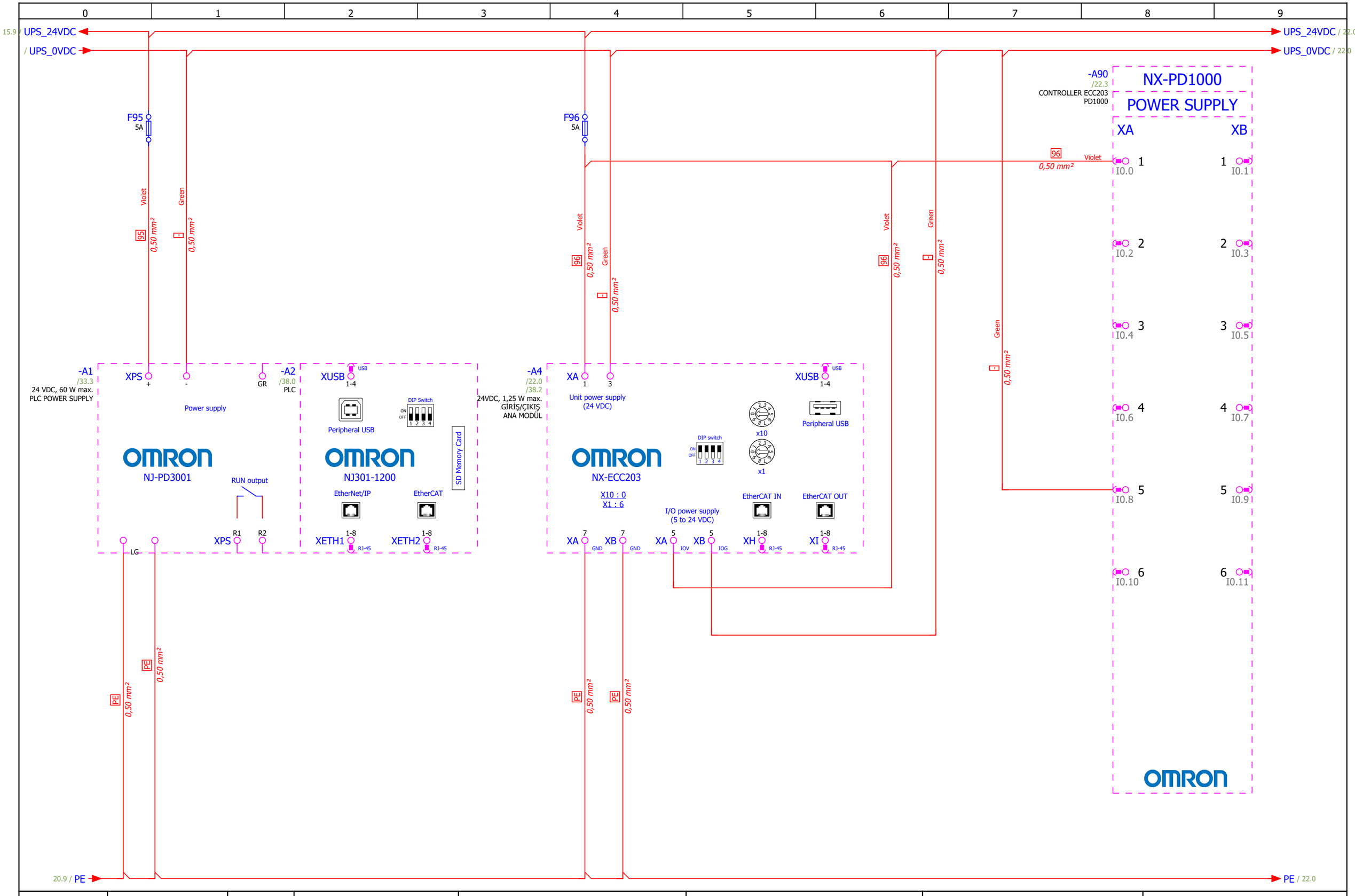

Project Version	v0.2	Author	OĞULCAN YILMAZ	GT FORM	**Güven Teknik Makina ve Kalıp Ind.Trade.Co.Ltd** Kavaklı Mah. Pamukova Sok. No:6 Silivri/İstanbul/Turkey +90 212 485 09 67 info@guventeknikmakina.com	**GT8065M**	DC DEVICES-1
Last Update	20/01/2025	Revision					Page : 20 /42

UPS_24VDC
UPS_0VDC
21.9 / PE

F97
3A

-A90
/21.8
NXTC POWER SUPPLY

NX-PD1000
POWER SUPPLY

XA XB

1 I0.0 — 1 I0.1
2 I0.2 — 2 I0.3
3 I0.4 — 3 I0.5
4 I0.6 — 4 I0.7
5 I0.8 — 5 I0.9
6 I0.10 — 6 I0.11

OMRON

F98
3A

UPS_24VDC / 24.5
UPS_0VDC / 24.5
PE / 22.0

Violet 97 0,50 mm²
Green 0,50 mm²
Violet 98 0,50 mm²
Green 0,50 mm²
PE 0,50 mm²
PE 0,50 mm²
PE 0,50 mm²

-A4
/21.3
/38.2
24VDC, 1,25 W max.
TEMPERATURE
MODULE

XA 1 3
Unit power supply
(24 VDC)

XUSB USB 1-4
Peripheral USB

x10
x1

DIP switch
ON
OFF
1 2 3 4
SWITCH 4 (ADRESS +100) :ON

OMRON
NX-ECC203
NODE ADRESS : 100

X10 : 0
X1 : 0

EtherCAT IN
EtherCAT OUT

I/O power supply
(5 to 24 VDC)

XA 7 GND
XB 7 GND
XA 5 IOV
XB 5 IOG
XH 1-8 RJ-45
XI 1-8 RJ-45

Ethernet Hub
U8
/38.3

X1 1 PWR+
2 PWR-
PE 3

PWR

852-111

1 2 3 4 5 PE

WAGO

22.9 / PE
PE / 23.0

Project Version	v0.2	Author	OĞULCAN YILMAZ	GT FORM	**Güven Teknik Makina ve Kalıp Ind.Trade.Co.Ltd** Kavaklı Mah. Pamukova Sok. No:6 Silivri/İstanbul/Turkey +90 212 485 09 67 info@guventeknikmakina.com	**GT8065M**	DC DEVICES-2
Last Update	20/01/2025	Revision					Page : 21 /42

/ 24VDC
/ 0VDC
22.9 / PE

24VDC / 23
0VDC / 23.0
PE / 24.0

F99 3A
F100 3A
F101 3A

Violet 99 0,50 mm²
Green - 0,50 mm²
PE 0,50 mm²

Violet 100 0,50 mm²
Green - 0,50 mm²
PE 0,50 mm²

Violet 101 0,50 mm²
Green - 0,50 mm²
PE 0,50 mm²

Secomea
U9
/38.3
3 +12-24V in
2 GND
1 PE
4 +5V out
8 Output 2
5 GND
9 Output 1a
10 Output 1b
ETH1 DEV1
ETH2 UPLINK1
ANT1
6 Input 2
7 Input 1
COM DB9
USB1
USB2

EtherCat Hub
U10
/38.0
ETHERCAT HUB 1
+24V DC
0V
FG
OMRON
GX-JC03
LAN Port
XIN 1-8 RJ-45
X2 1-8 RJ-45
X3 1-8 RJ-45

EtherCat Hub
U11
ETHERCAT HUB 2
+24V DC
0V
FG
OMRON
GX-JC03
LAN Port
XIN 1-8 RJ-45
X2 1-8 RJ-45
X3 1-8 RJ-45

Project Version	v0.2	Author	OĞULCAN YILMAZ	GT FORM	**Güven Teknik Makina ve Kalıp Ind.Trade.Co.Ltd** Kavaklı Mah. Pamukova Sok. No:6 Silivri/İstanbul/Turkey +90 212 485 09 67 info@guventeknikmakina.com	**GT8065M**	DC DEVICES-3
Last Update	20/01/2025	Revision					Page : 22 /42

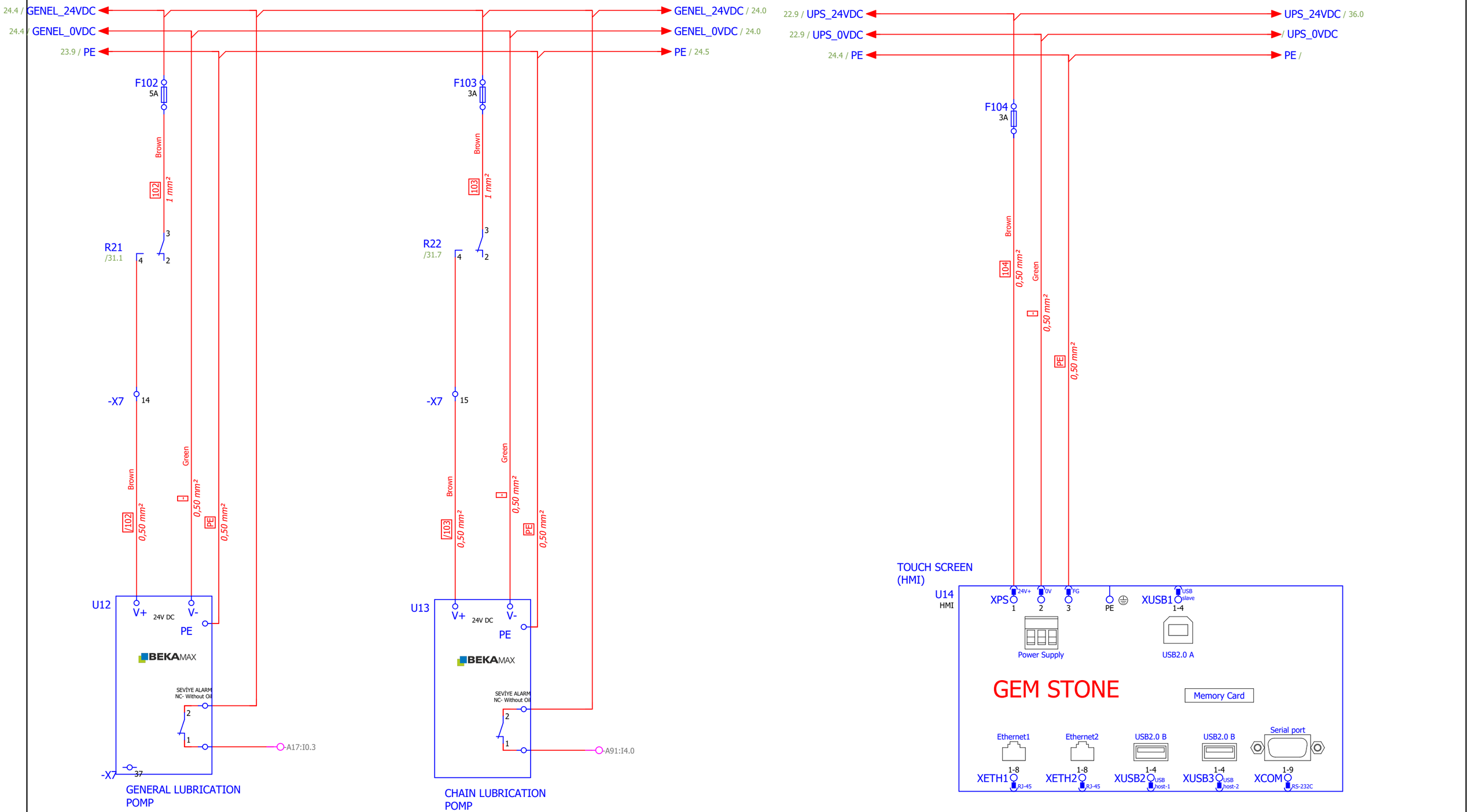

Project Version	v0.2	Author	OĞULCAN YILMAZ	GT FORM	**Güven Teknik Makina ve Kalıp Ind.Trade.Co.Ltd** Kavaklı Mah. Pamukova Sok. No:6 Silivri/İstanbul/Turkey +90 212 485 09 67 info@guventeknikmakina.com	**GT8065M**	DC DEVICES-4
Last Update	20/01/2025	Revision					Page : 23 /42

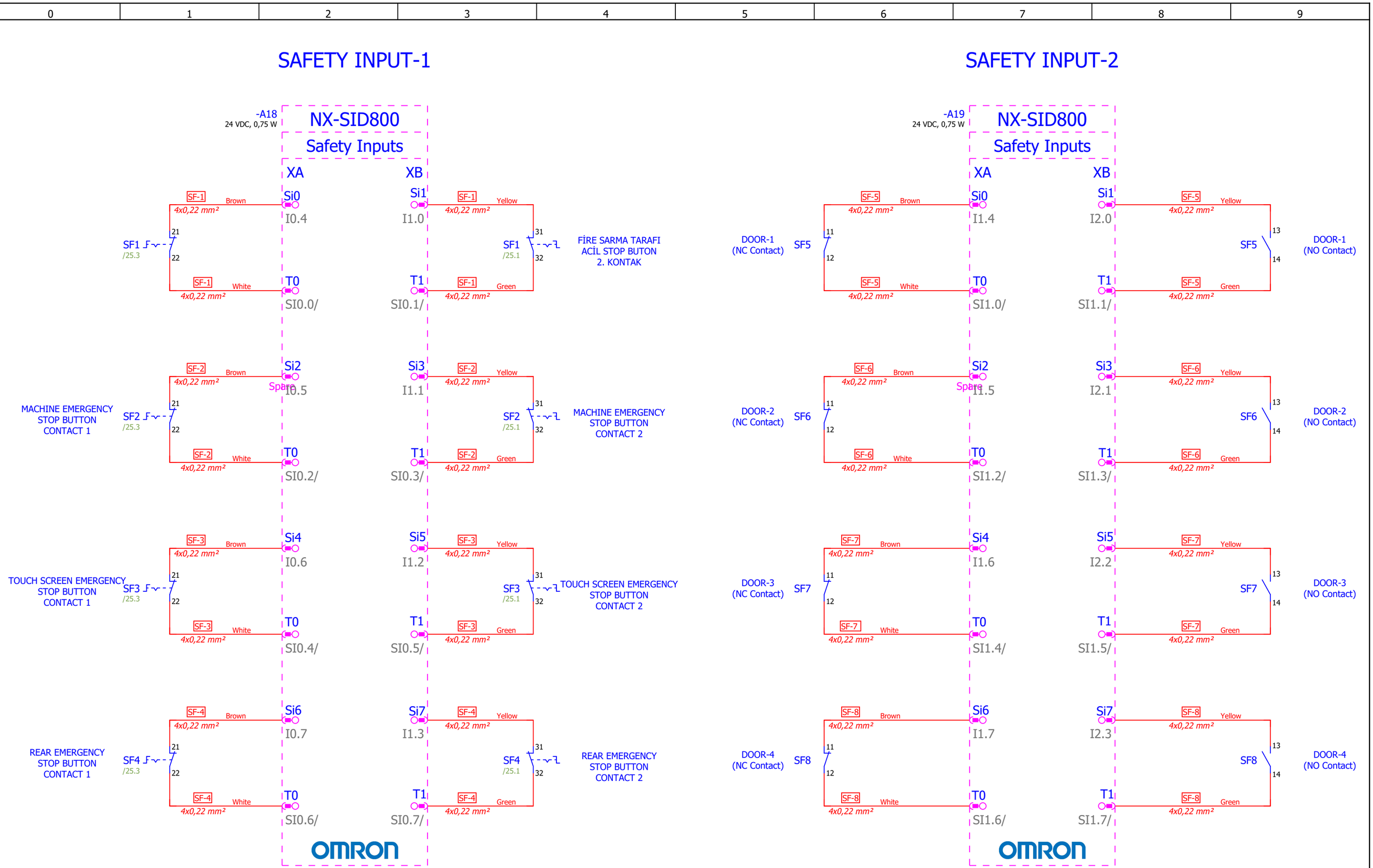

Project Version	v0.2	Author	OĞULCAN YILMAZ	GT FORM	**Güven Teknik Makina ve Kalıp Ind.Trade.Co.Ltd** Kavaklı Mah. Pamukova Sok. No:6 Silivri/İstanbul/Turkey +90 212 485 09 67 info@guventeknikmakina.com	**GT8065M**	SAFETY-1
Last Update	20/01/2025	Revision					Page : 24 /42

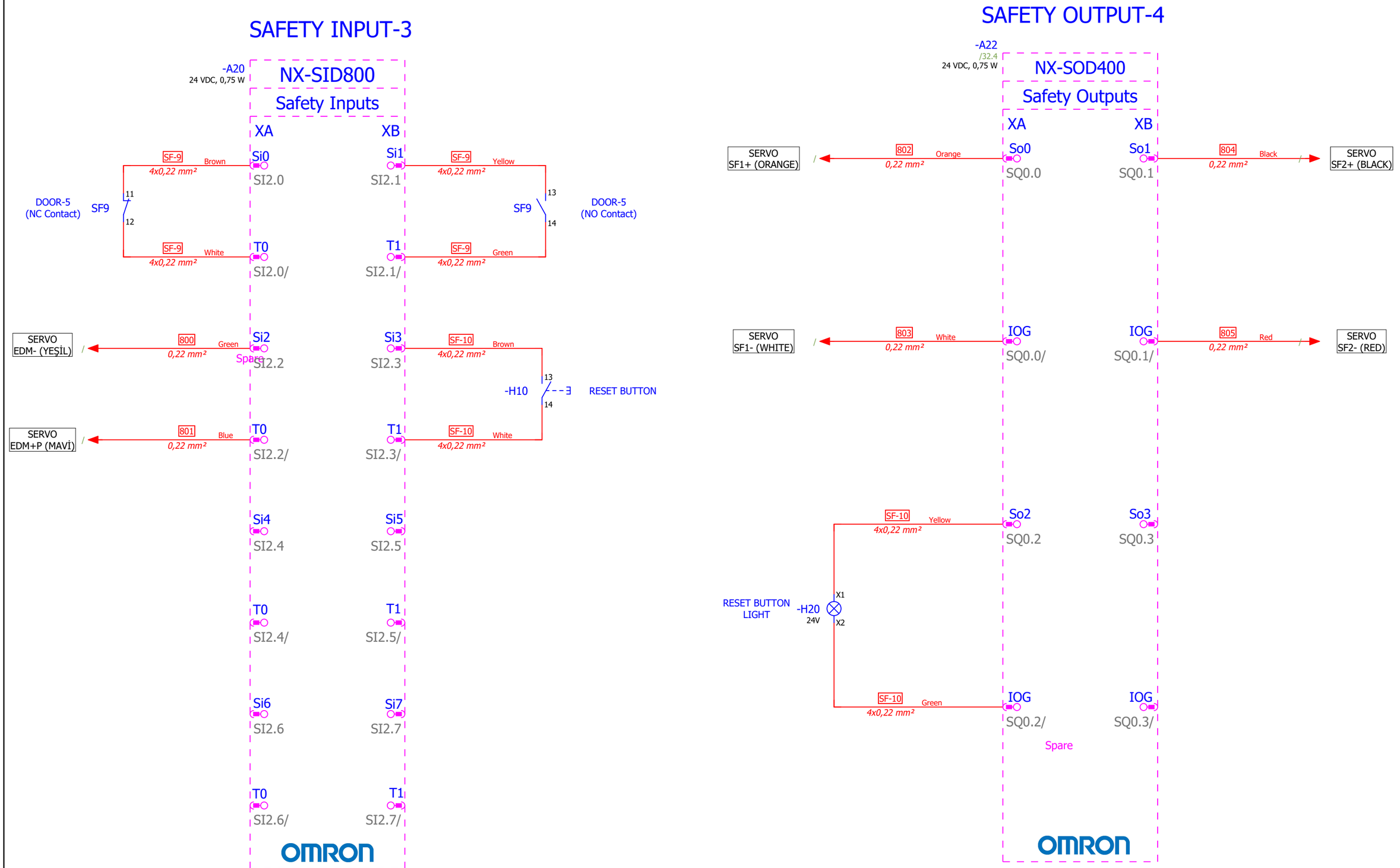

Project Version	v0.2	Author	OĞULCAN YILMAZ	GT FORM	**Güven Teknik Makina ve Kalıp Ind.Trade.Co.Ltd** Kavaklı Mah. Pamukova Sok. No:6 Silivri/İstanbul/Turkey +90 212 485 09 67 info@guventeknikmakina.com	**GT8065M**	SAFETY-2
Last Update	20/01/2025	Revision					Page : 25 /42

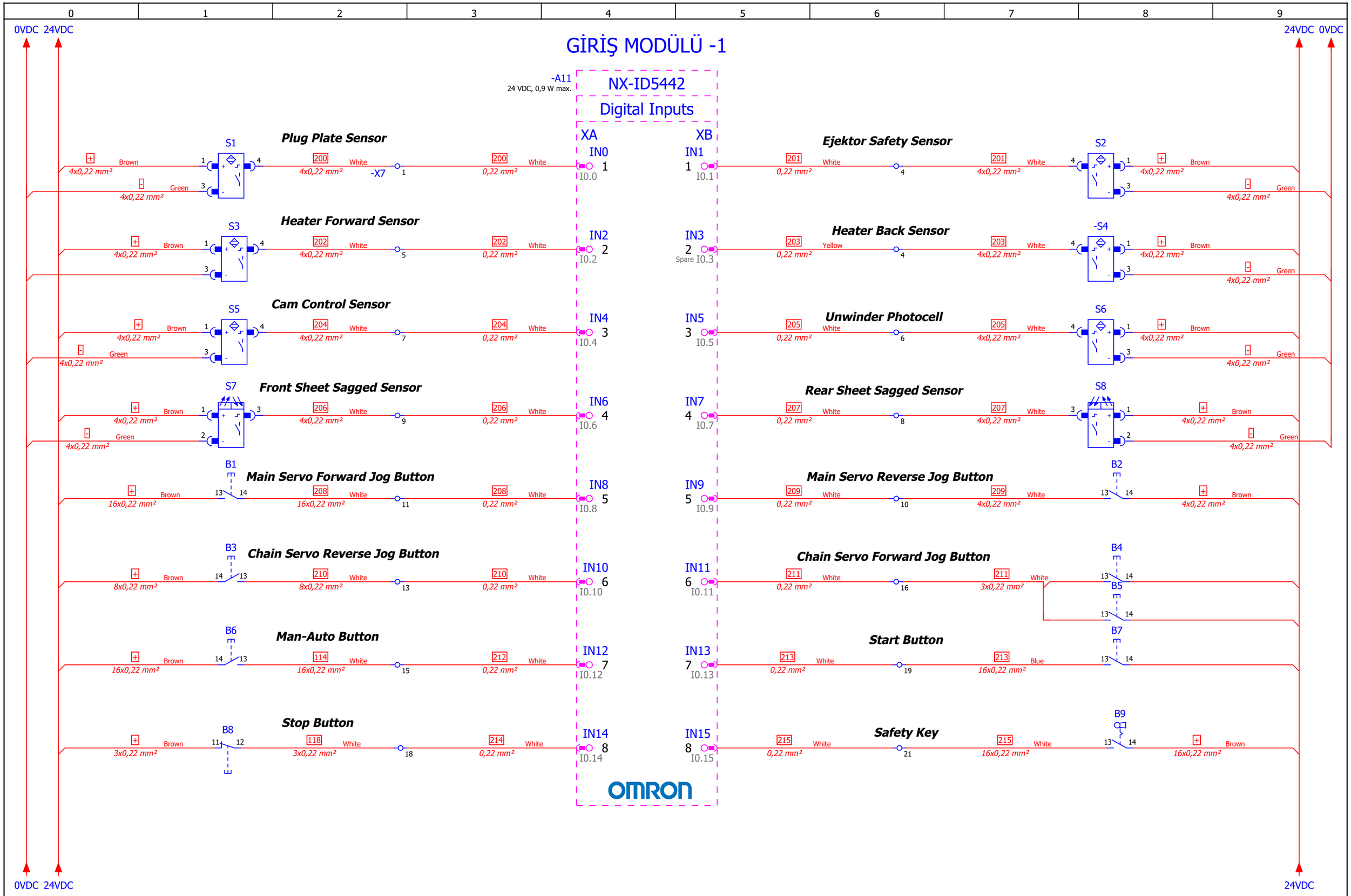

Project Version	v0.2	Author	OĞULCAN YILMAZ	GT FORM	**Güven Teknik Makina ve Kalıp Ind.Trade.Co.Ltd** Kavaklı Mah. Pamukova Sok. No:6 Silivri/İstanbul/Turkey +90 212 485 09 67 info@guventeknikmakina.com	**GT8065M**	INPUTS-1
Last Update	20/01/2025	Revision					Page : 26 /42

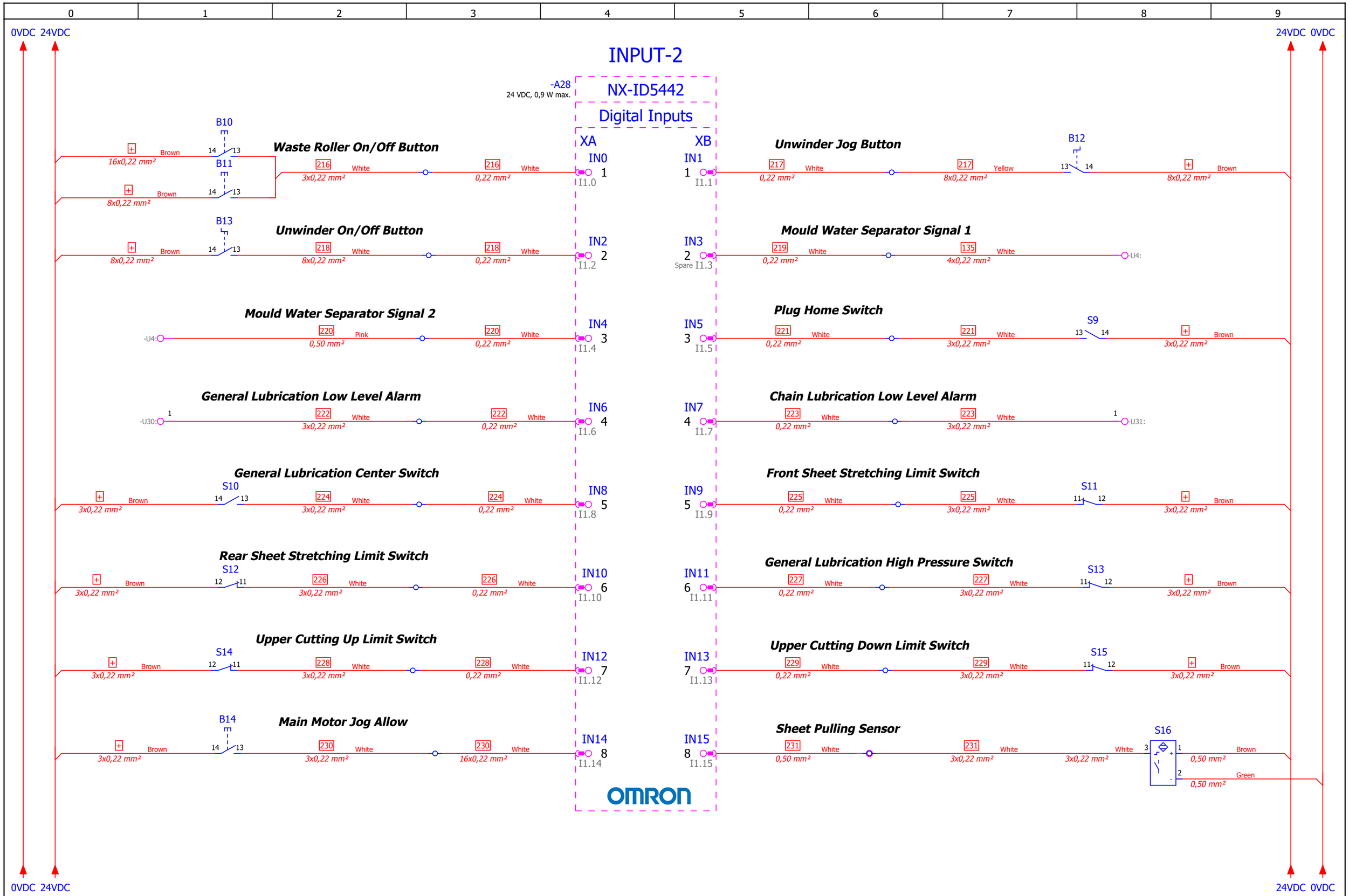

Project Version	v0.2	Author	OĞULCAN YILMAZ	GT FORM	Güven Teknik Makina ve Kalıp Ind.Trade.Co.Ltd Kavaklı Mah. Pamukova Sok. No:6 Silivri/İstanbul/Turkey +90 212 485 09 67 info@guventeknikmakina.com	GT8065M	INPUTS-2
Last Update	20/01/2025	Revision					Page : 27 /42

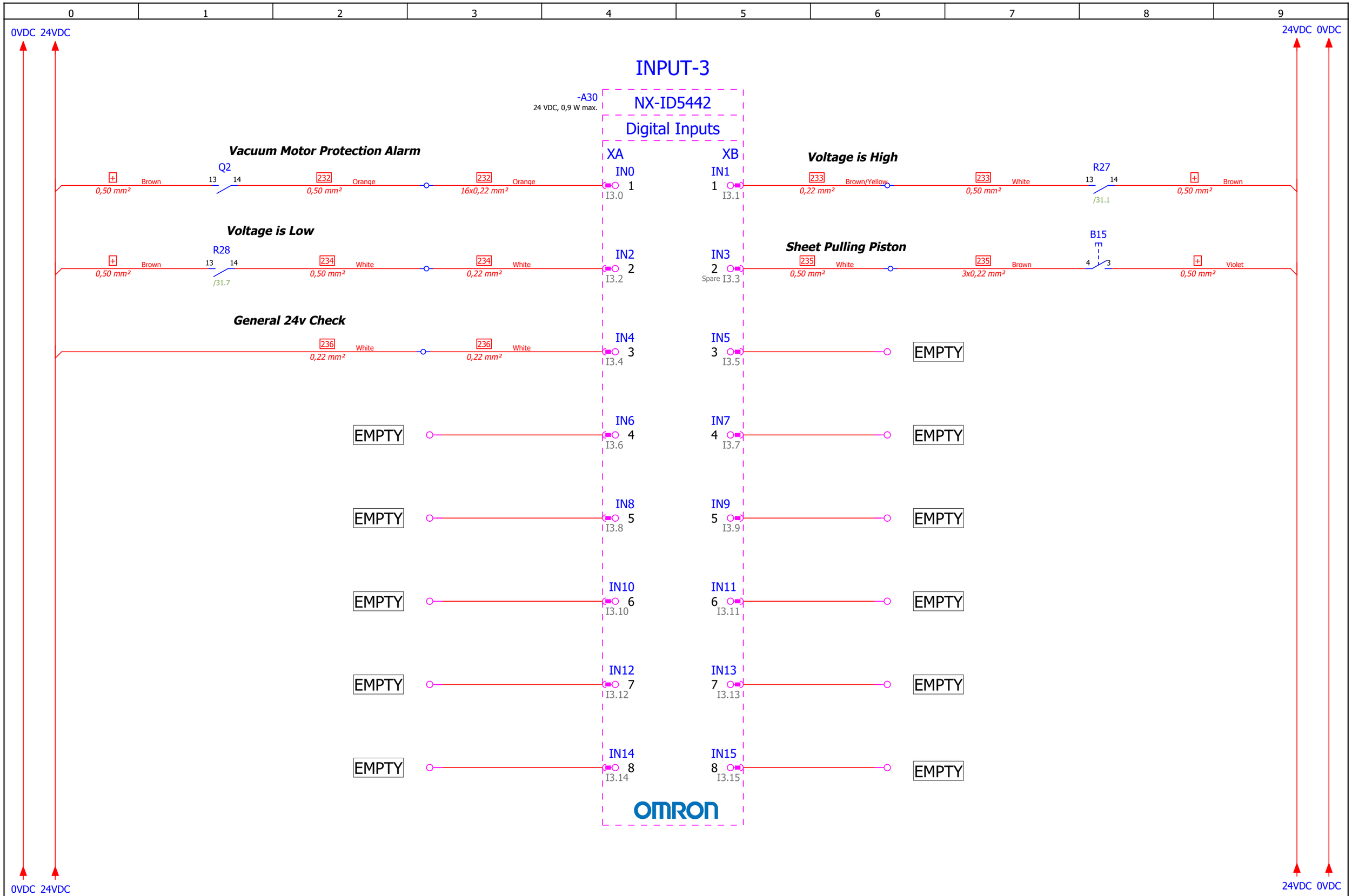

Project Version	v0.2	Author	OĞULCAN YILMAZ	GT FORM	**Güven Teknik Makina ve Kalıp Ind.Trade.Co.Ltd** Kavaklı Mah. Pamukova Sok. No:6 Silivri/İstanbul/Turkey +90 212 485 09 67 info@guventeknikmakina.com	**GT8065M**	INPUTS-3
Last Update	20/01/2025	Revision					Page : 28 /42

OUTPUTS-1

-A32
24 VDC, 1,1 W max.

NX-OD5256
digital outputs

0VDC

Main Motor Brake Relay
R1 — 2 Poles
- Green 0,50 mm² — A2 A1 — 300 Brown 16x0,22 mm²
OUT0 1 Q0.0

Plug Motor Brake Relay
R2 — 2 Poles
301 White 16x0,22 mm² — A1 A2 — - Green 0,50 mm²
OUT1 1 Q0.1

Cutting Motor Brake Relay
R3 — 2 Poles
- Green 0,50 mm² — A2 A1 — 302 Green 16x0,22 mm²
OUT2 2 Q0.2

Main Air Valve
R4 — 2 Poles
303 Yellow 16x0,22 mm² — A1 A2 — - Green 0,50 mm²
OUT3 2 Q0.3

Heater Valve
R5 — 2 Poles
- Green 0,50 mm² — A2 A1 — 304 Gray 16x0,22 mm²
OUT4 3 Q0.4

Support Piston Air Valve
R6 — 2 Poles
305 Pink 16x0,22 mm² — A1 A2 — - Green 0,50 mm²
OUT5 3 Q0.5

Press Valve
R7 — 2 Poles
- Green 0,50 mm² — A2 A1 — 306 Red 16x0,22 mm²
OUT6 4 Q0.6

Bottom Forming Air Valve
R8 — 2 Poles
307 Blue 16x0,22 mm² — A1 A2 — - Green 0,50 mm²
OUT7 4 Q0.7

Vacuum Valve
R9 — 2 Poles
- Green 0,50 mm² — A2 A1 — 308 Violet 16x0,22 mm²
OUT8 5 Q0.8

Forming Air Valve
R10 — 2 Poles
309 Black 16x0,22 mm² — A1 A2 — - Green 0,50 mm²
OUT9 5 Q0.9

Blowing Valve
R11 — 2 Poles
- Green 0,50 mm² — A2 A1 — 310 Gray/Pink 16x0,22 mm²
OUT10 6 Q0.10

Chain Arm Open Valve
R12 — 2 Poles
311 Red/Blue 16x0,22 mm² — A1 A2 — - Green 0,50 mm²
OUT11 6 Q0.11

Ejector Valve
R13 — 2 Poles
- Green 0,50 mm² — A2 A1 — 312 Brown/Green 16x0,22 mm²
OUT12 7 Q0.12

Water Valve
R14 — 2 Poles
313 Brown/Yellow 16x0,22 mm² — A1 A2 — - Green 0,50 mm²
OUT13 7 Q0.13

Vacuum Motor Start Relay
-R15 — 2 Poles
- Green 0,50 mm² — A2 A1 — 314 White/Green 16x0,22 mm²
OUT14 Spare 8 Q0.14

Alarm Relay
R16 — 2 Poles
315 White/Yellow 16x0,22 mm² — A1 A2 — - Green 0,50 mm²
OUT15 Spare 8 Q0.15

OMRON

0VDC

Project Version	v0.2	Author	OĞULCAN YILMAZ	GT FORM	**Güven Teknik Makina ve Kalıp Ind.Trade.Co.Ltd** Kavaklı Mah. Pamukova Sok. No:6 Silivri/İstanbul/Turkey +90 212 485 09 67 info@guventeknikmakina.com	**GT8065M**	OUTPUTS-1
Last Update	20/01/2025	Revision					Page : 29 /42

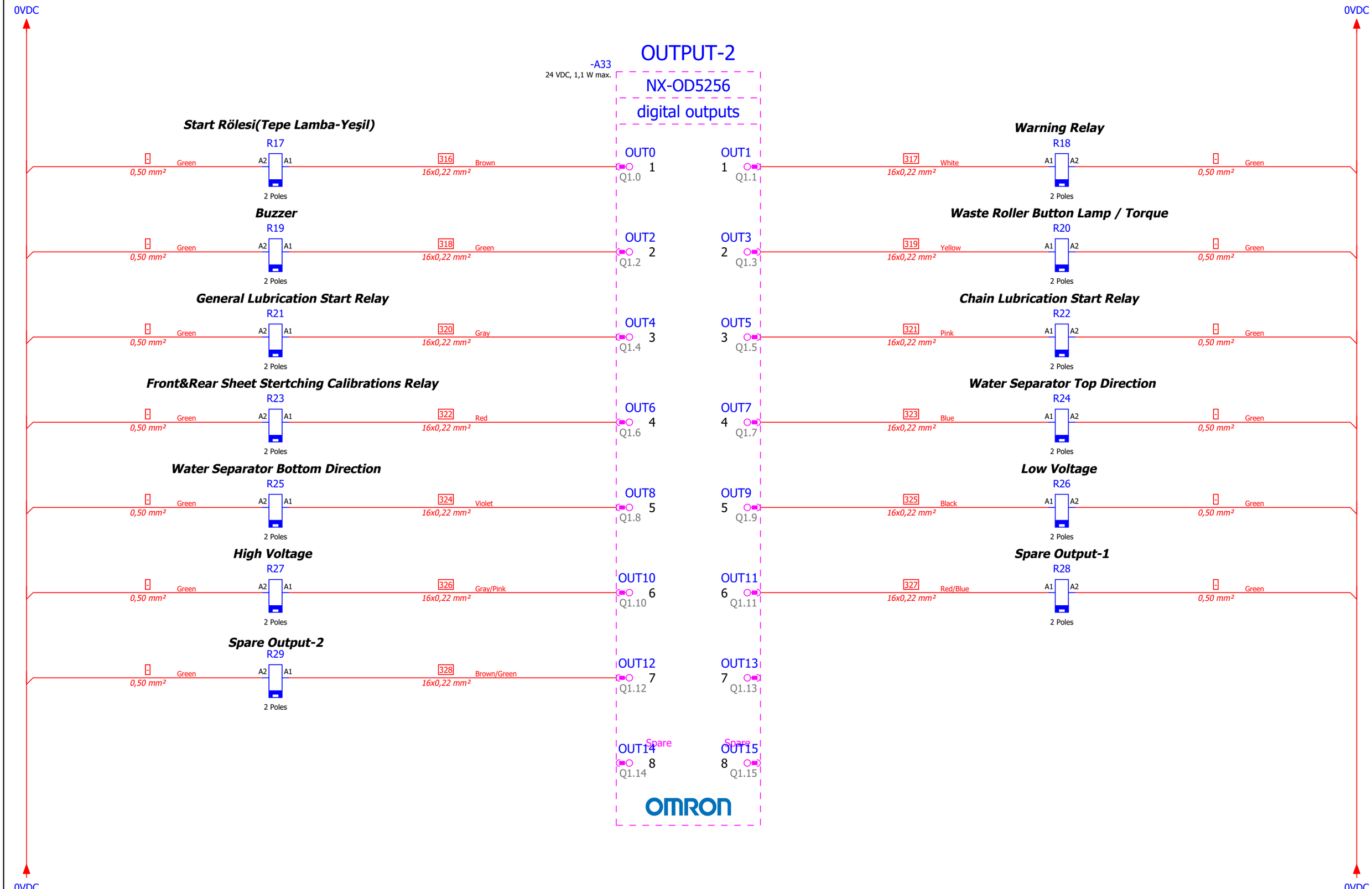

Project Version	v0.2	Author	OĞULCAN YILMAZ	GT FORM	**Güven Teknik Makina ve Kalıp Ind.Trade.Co.Ltd** Kavaklı Mah. Pamukova Sok. No:6 Silivri/İstanbul/Turkey +90 212 485 09 67 info@guventeknikmakina.com	**GT8065M**	OUTPUTS-2
Last Update	20/01/2025	Revision					Page : 30 /42

0 | 1 | 2 | 3 | 4 | 5 | 6 | 7 | 8 | 9

32.0 0VDC 32.0 24VDC

Air Pressure Sensor

ANALOG INPUT -1

-TF1

PSE560-02

PSE

Data sheet(EN)

SMC

CN1 | 1 DC(+) BN | 2 NC | 3 DC(-) BU | 4 OUTPUT BK

+ Brown 3x0,22 mm²

- Green 3x0,22 mm²

500 White 3x0,22 mm²

- Green 0,50 mm²

-A22 /26.6

NX-AD3604

Analog Inputs

XA		XB	
Input1+	1	Input2+	1
Input1-	2	Input2-	2
Input3+	3	Input4+	3
Input3-	4	Input4-	4
AG	5	AG	5
AG	6	AG	6

PIW0 PIW4 PIW2 PIW6 Spare

OMRON

32.9 24VDC 32.9 0VDC

0VDC 32.0 24VDC 32.0

24VDC 32.9 0VDC 32.9

Project Version	v0.2	Author	OĞULCAN YILMAZ	GT FORM	**Güven Teknik Makina ve Kalıp Ind.Trade.Co.Ltd** Kavaklı Mah. Pamukova Sok. No:6 Silivri/İstanbul/Turkey +90 212 485 09 67 info@guventeknikmakina.com	**GT8065M**	ANALOG GİRİŞ -1
Last Update	20/01/2025	Revision					Page : 31 /42

0 1 2 3 4 5 6 7 8 9

33.0 33.0 0VDC 24VDC

33.9 33.9 0VDC 24VDC

WATER FLOWMETER

FLOWTECH

24VDC

+ - B- A+ F- F+ I- I+

+ Brown *2x0,50 mm²*

\- White *2x0,50 mm²*

504 White *4x0,22 mm²*

\- Green *4x0,22 mm²*

-A1 /21.0

XA 1 3 5
Input1+ Input1- AG

XB 1 3 5
Input2+ Input2- AG

NX-AD2208 OMRON

analog inputs

ANALOG INPUT -2

0VDC 24VDC
33.0 33.0

0VDC 24VDC
33.9 33.9

Project Version	v0.2	Author	OĞULCAN YILMAZ	GT FORM	**Güven Teknik Makina ve Kalıp Ind.Trade.Co.Ltd** Kavaklı Mah. Pamukova Sok. No:6 Silivri/İstanbul/Turkey +90 212 485 09 67 info@guventeknikmakina.com	**GT8065M**	ANALOG GİRİŞ -2
Last Update	20/01/2025	Revision					Page : 32 /42

33.a.0 UPS24VDC
33.a.0 0VDC
33.a.0 24VDC

WATER SEPARATOR

-U43

TKC

DC 24V

4-20mA IN

\+ -

\+ -

\+ Brown 4x0,22 mm²

\- Green 4x0,22 mm²

U110 White 4x0,22 mm² — 1 — U110 White 0,50 mm²

\+ Violet 0,50 mm²

\- Green 0,50 mm²

-A5

XA 1 Input1+ | 2 IOV | 3 IOG

XB 1 Input2+ | 2 IOV | 3 IOG

NX-DA3203 OMRON

ANALOG OUTPUT

ANALOG OUTPUT

UPS24VDC 33.a.0
0VDC 33.a.0
24VDC 33.a.0

Project Version	v0.2	Author	OĞULCAN YILMAZ	GT FORM	**Güven Teknik Makina ve Kalıp Ind.Trade.Co.Ltd** Kavaklı Mah. Pamukova Sok. No:6 Silivri/İstanbul/Turkey +90 212 485 09 67 info@guventeknikmakina.com	**GT8065M**	ANALOG OUTPUT
Last Update	20/01/2025	Revision					Page : 33 /42

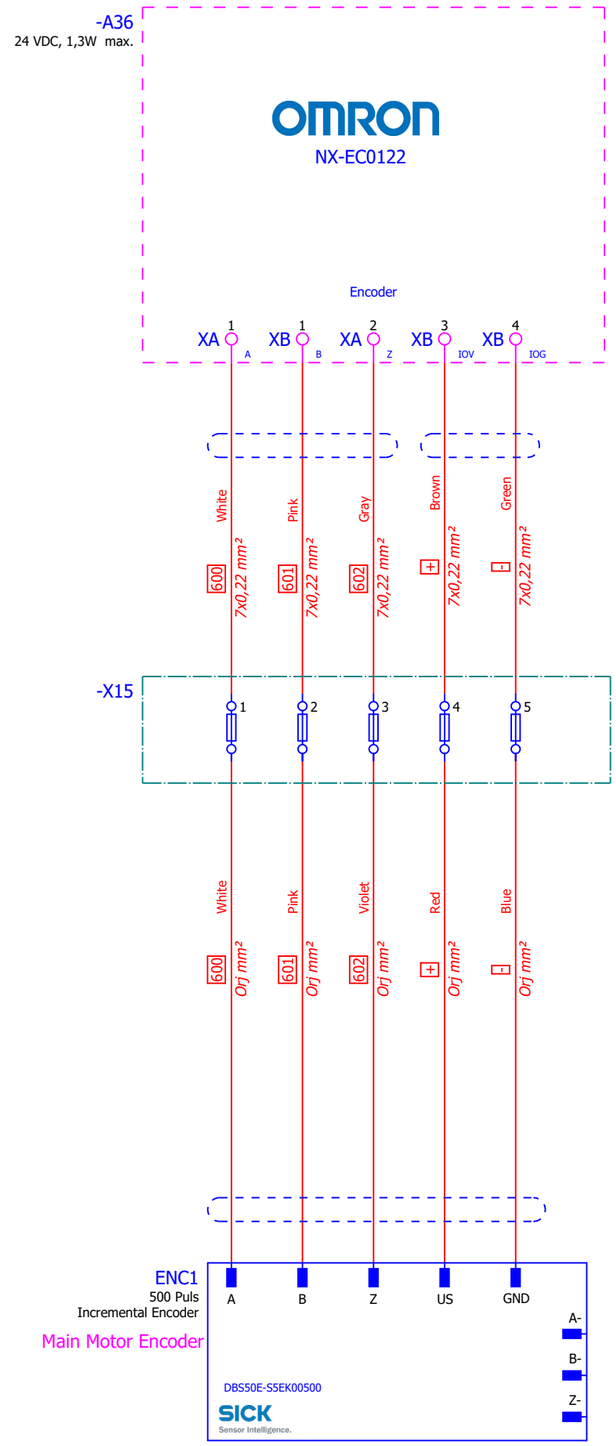
-A36
24 VDC, 1,3W max.
OMRON
NX-EC0122
Encoder
XA 1 A
XB 1 B
XA 2 Z
XB 3 IOV
XB 4 IOG
White
Pink
Gray
Brown
Green
600
601
602
+
-
7x0,22 mm²
-X15
1
2
3
4
5
White
Pink
Violet
Red
Blue
Orj mm²
ENC1
500 Puls
Incremental Encoder
Main Motor Encoder
A
B
Z
US
GND
A-
B-
Z-
DBS50E-S5EK00500
SICK
Sensor Intelligence.

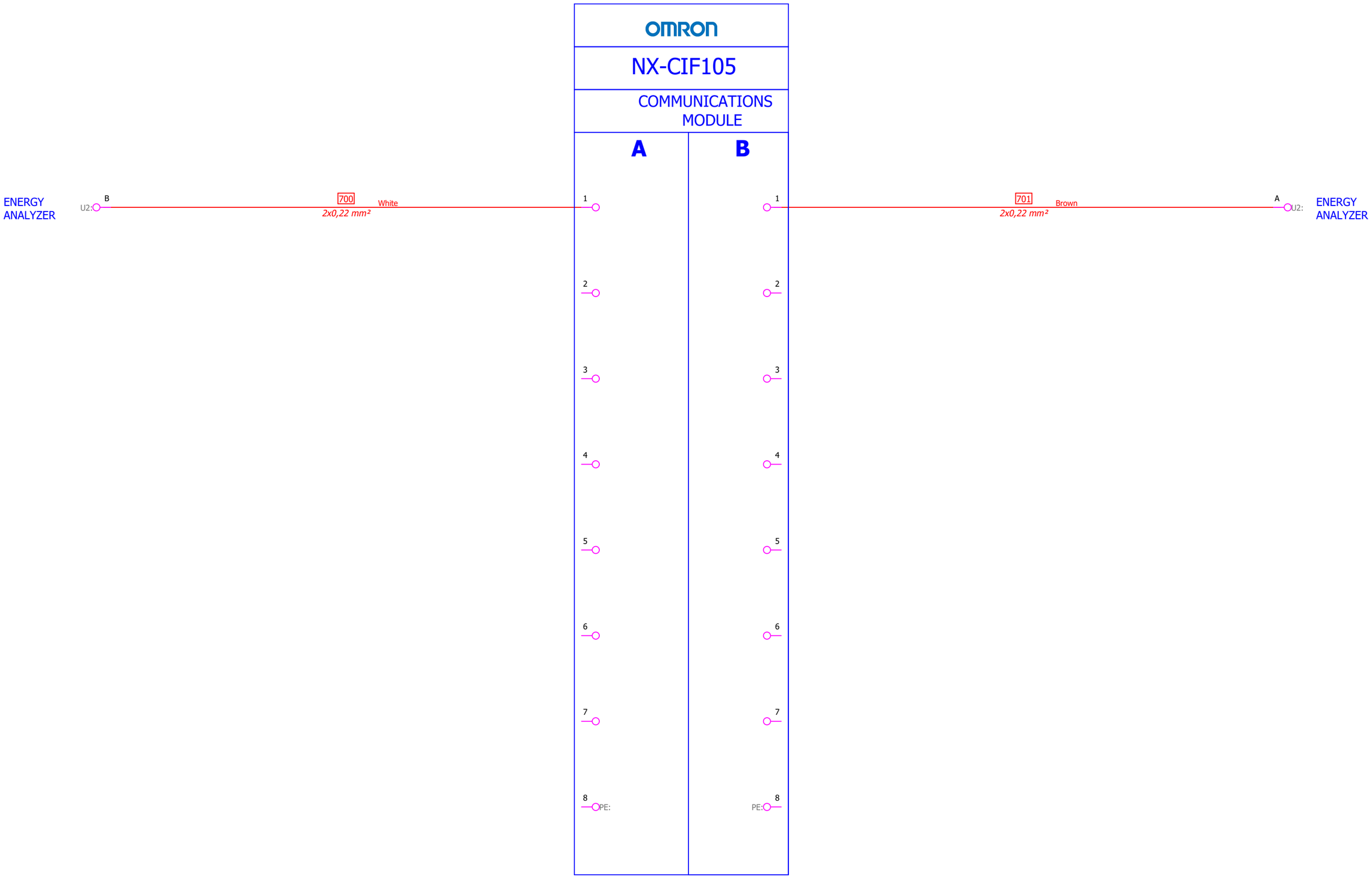
OMRON
NX-CIF105
COMMUNICATIONS MODULE
A
B
ENERGY ANALYZER
U2:
B
700
White
2x0,22 mm²
1
2
3
4
5
6
7
8
PE:
1
2
3
4
5
6
7
8
PE:
701
Brown
2x0,22 mm²
A
U2:
ENERGY ANALYZER

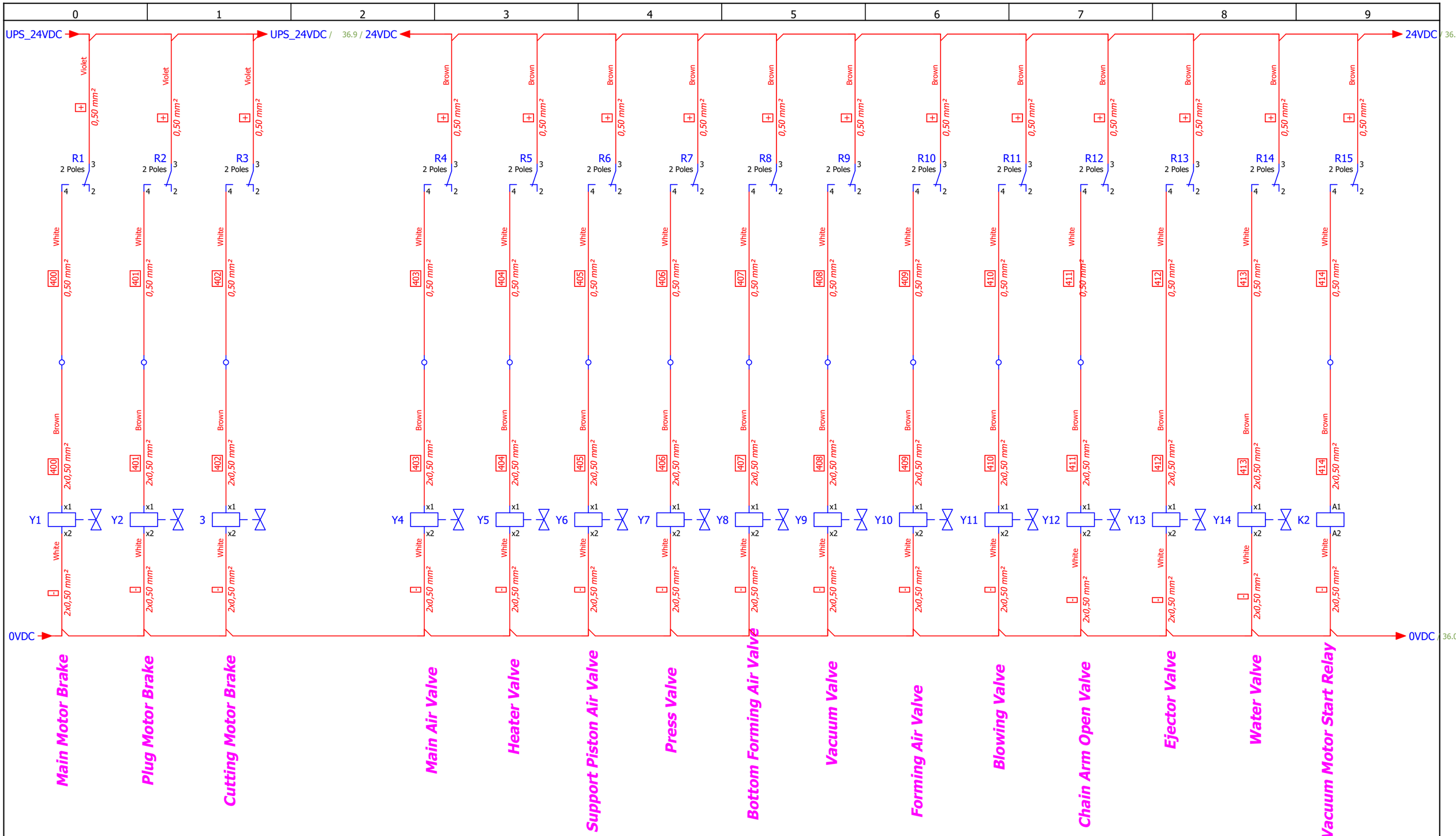

Project Version	v0.2	Author	OĞULCAN YILMAZ	GT FORM	**Güven Teknik Makina ve Kalıp Ind.Trade.Co.Ltd** Kavaklı Mah. Pamukova Sok. No:6 Silivri/İstanbul/Turkey +90 212 485 09 67 info@guventeknikmakina.com	**GT8065M**	RELAY OUTPUT-1
Last Update	20/01/2025	Revision					Page : 36 /42

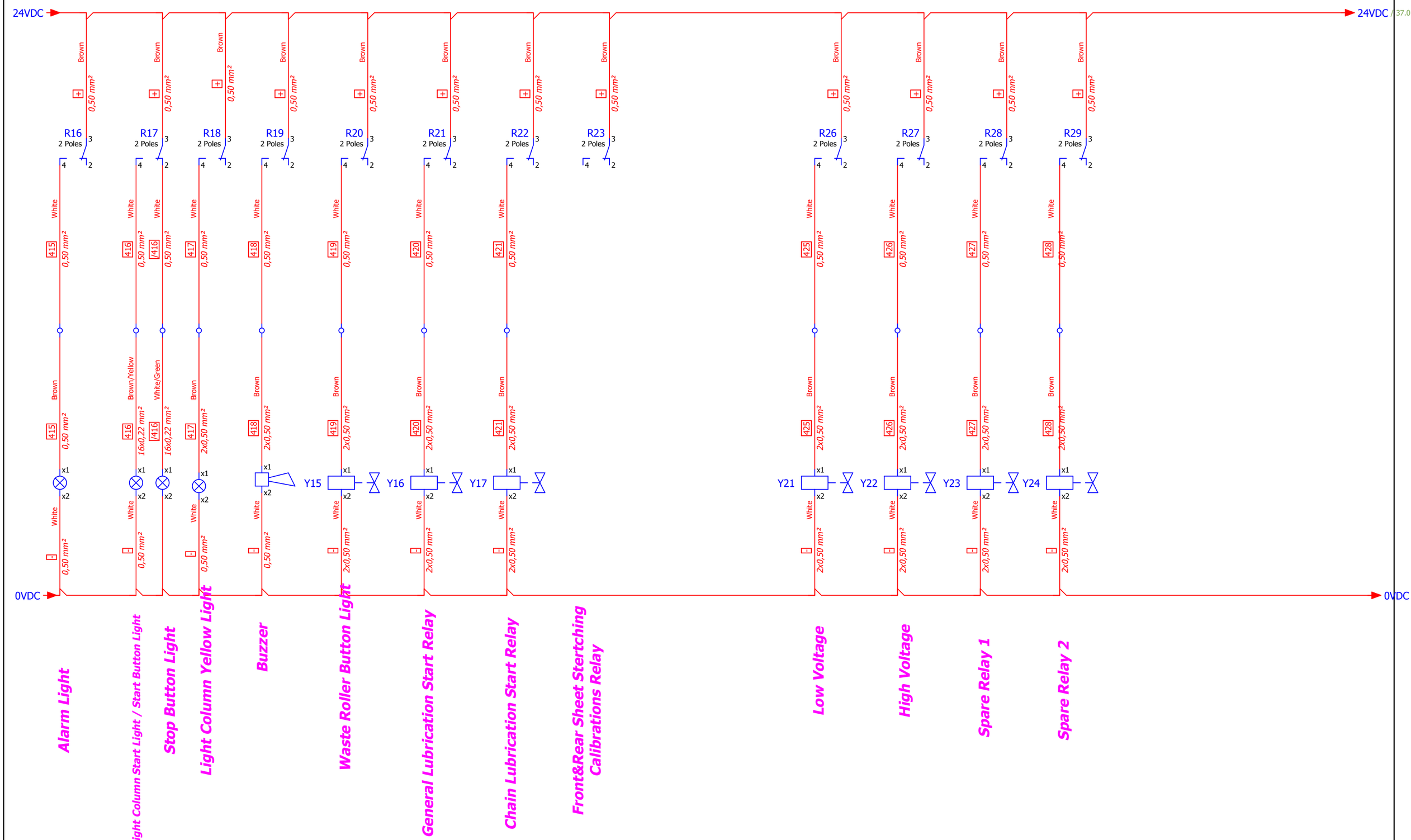

Project Version	v0.2	Author	OĞULCAN YILMAZ	GT FORM	**Güven Teknik Makina ve Kalıp Ind.Trade.Co.Ltd** Kavaklı Mah. Pamukova Sok. No:6 Silivri/İstanbul/Turkey +90 212 485 09 67 info@guventeknikmakina.com	**GT8065M**	RÖLE ÇIKIŞLARI-2
Last Update	20/01/2025	Revision					Page : 37 /42

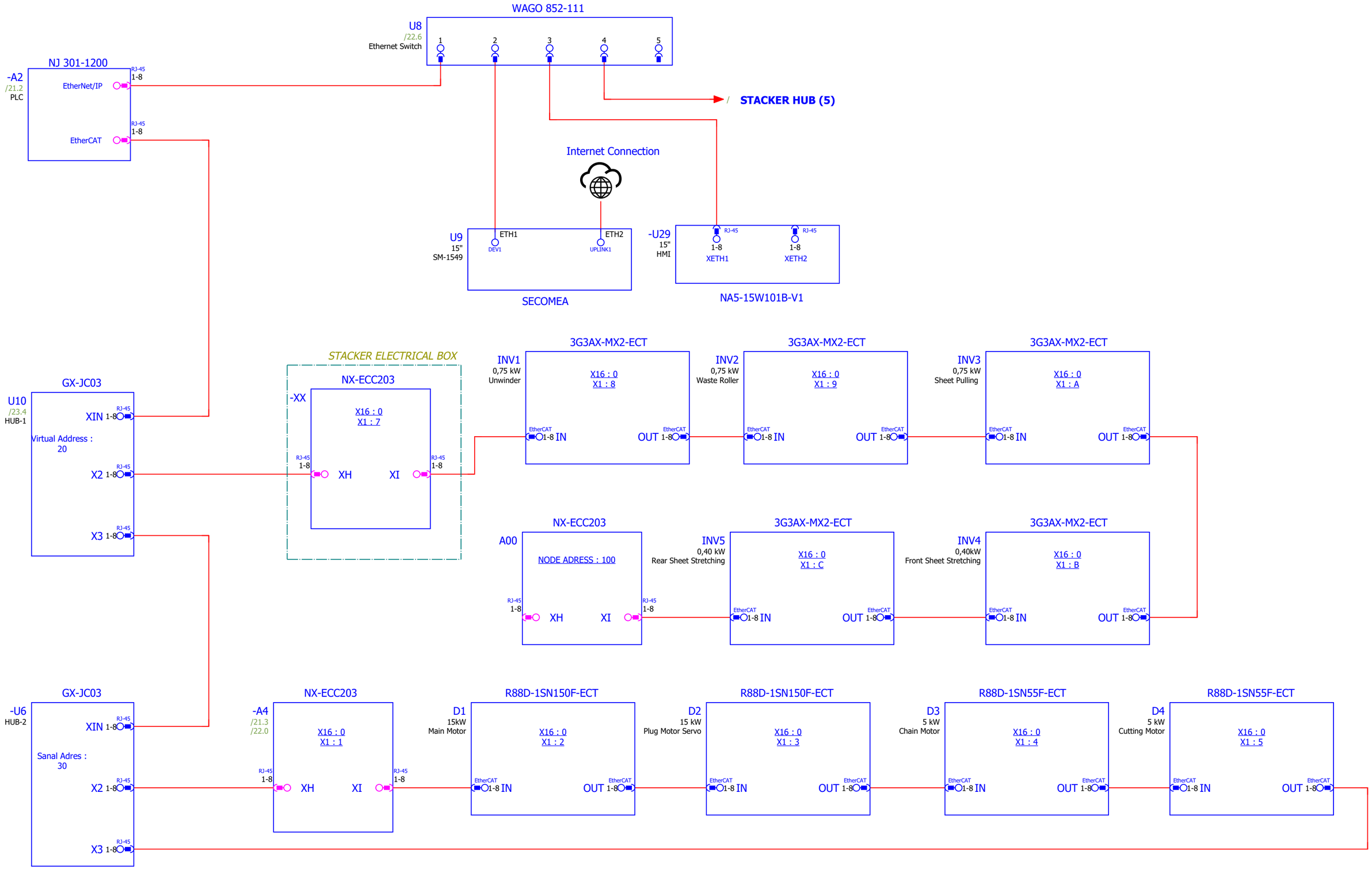

Project Version	v0.2	Author	OĞULCAN YILMAZ	GT FORM	**Güven Teknik Makina ve Kalıp Ind.Trade.Co.Ltd** Kavaklı Mah. Pamukova Sok. No:6 Silivri/İstanbul/Turkey +90 212 485 09 67 info@guventeknikmakina.com	**GT8065M**	NETWORK TOPOLOGY
Last Update	20/01/2025	Revision					Page : 38 /42

Lover Mold İnner Junction Box

X30

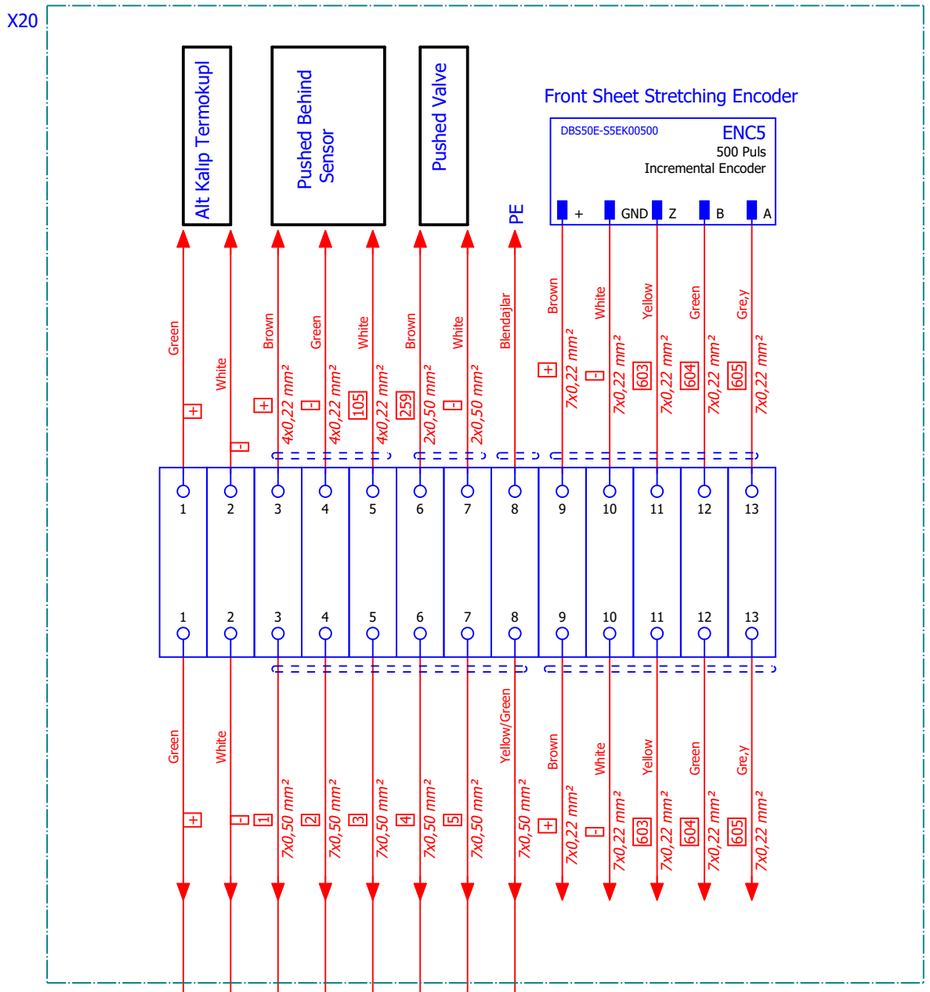

Lover Mold Front Junction Box

X31

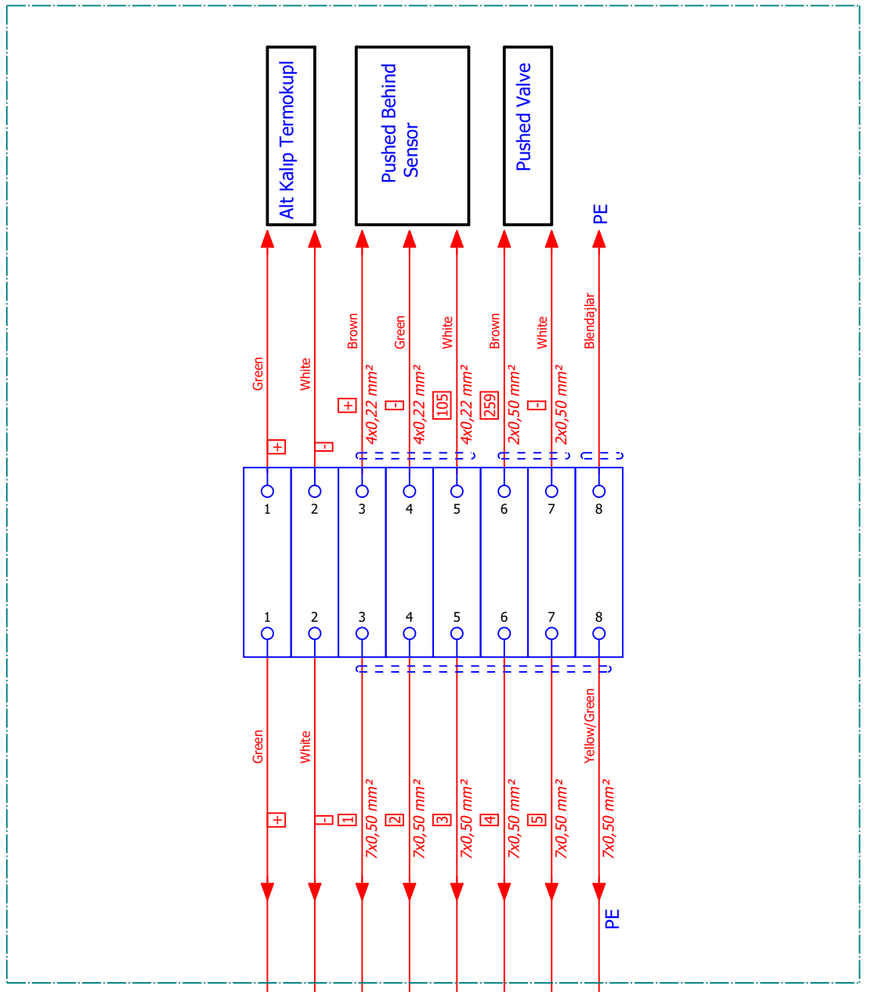

Project Version	v0.2	Author	OĞULCAN YILMAZ	GT FORM	**Güven Teknik Makina ve Kalıp Ind.Trade.Co.Ltd** Kavaklı Mah. Pamukova Sok. No:6 Silivri/İstanbul/Turkey +90 212 485 09 67 info@guventeknikmakina.com	**GT8065M**	Junction Box Connection
Last Update	20/01/2025	Revision					Page : 39 /42

0	1	2	3	4	5	6	7	8	9

Main Encoder Junction Box

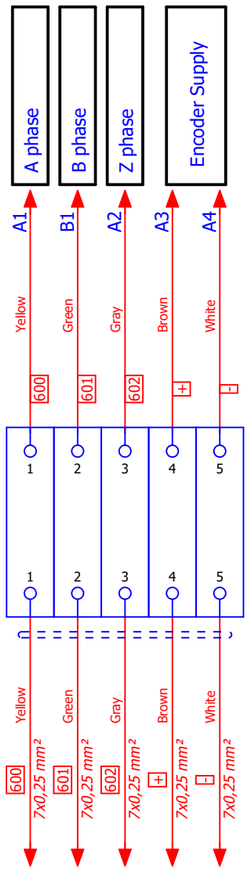

Rare Sheet Stretching Encoder

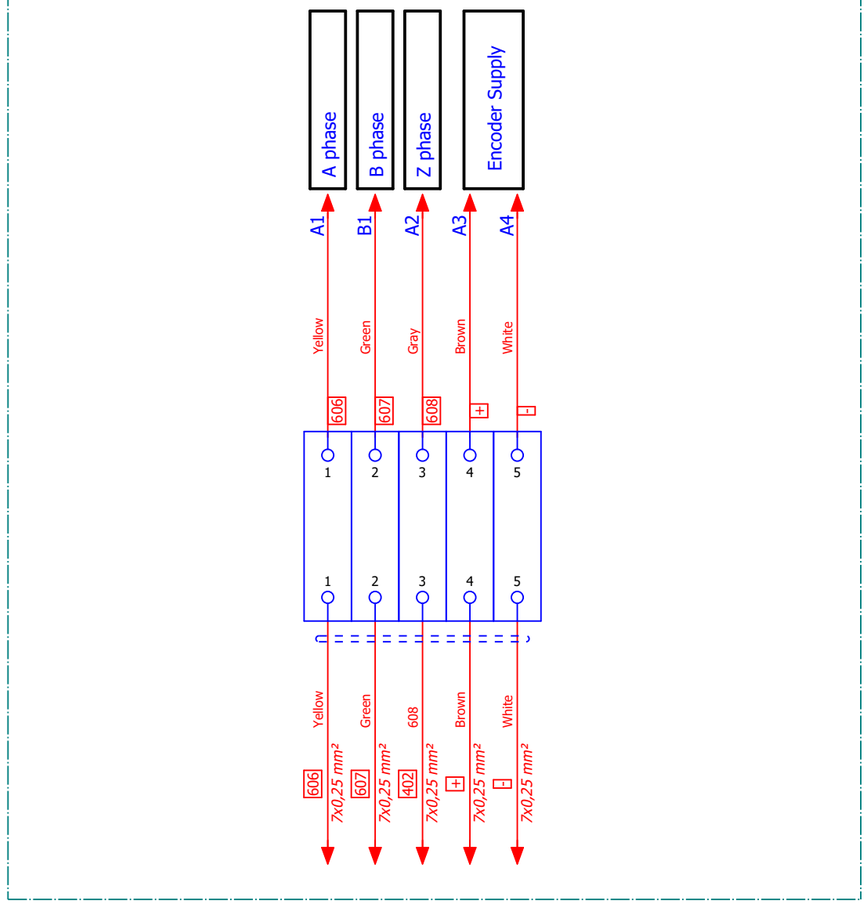

Project Version	v0.2	Author	OĞULCAN YILMAZ	GT FORM	**Güven Teknik Makina ve Kalıp Ind.Trade.Co.Ltd** Kavaklı Mah. Pamukova Sok. No:6 Silivri/İstanbul/Turkey +90 212 485 09 67 info@guventeknikmakina.com	**GT8065M**	Junction Box Connection
Last Update	20/01/2025	Revision					Page : 40 /42

0	1	2	3	4	5	6	7	8	9

Waste Roller Section Button Box

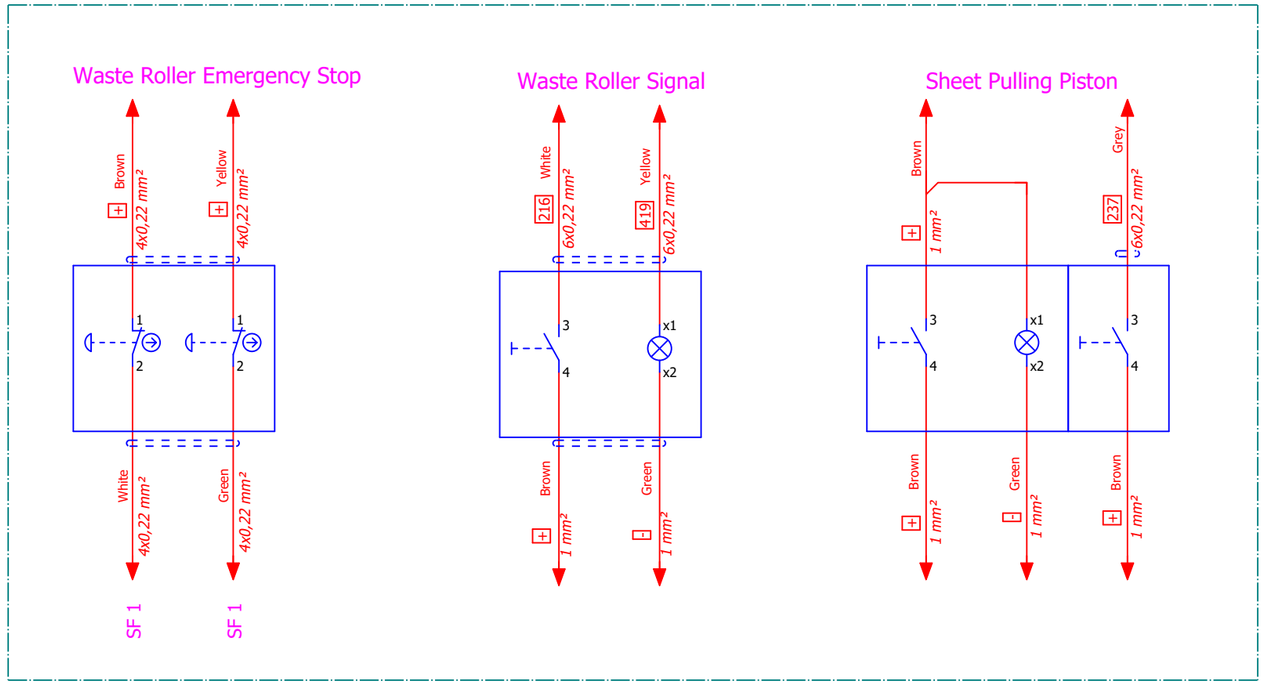

Machine Emergency Stop

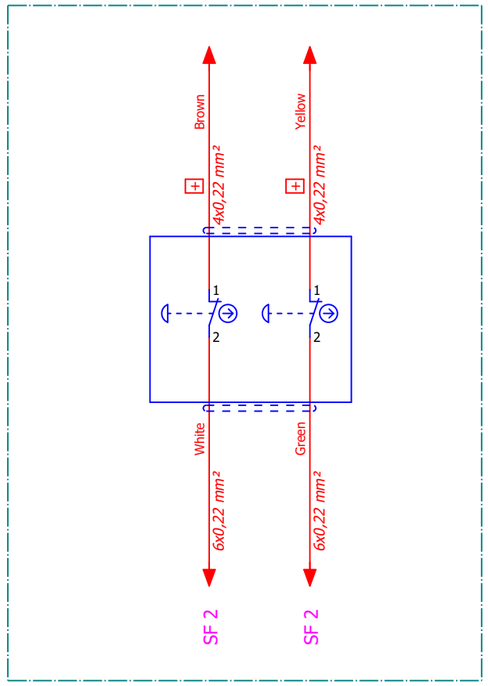

Unwinder Section Button Box

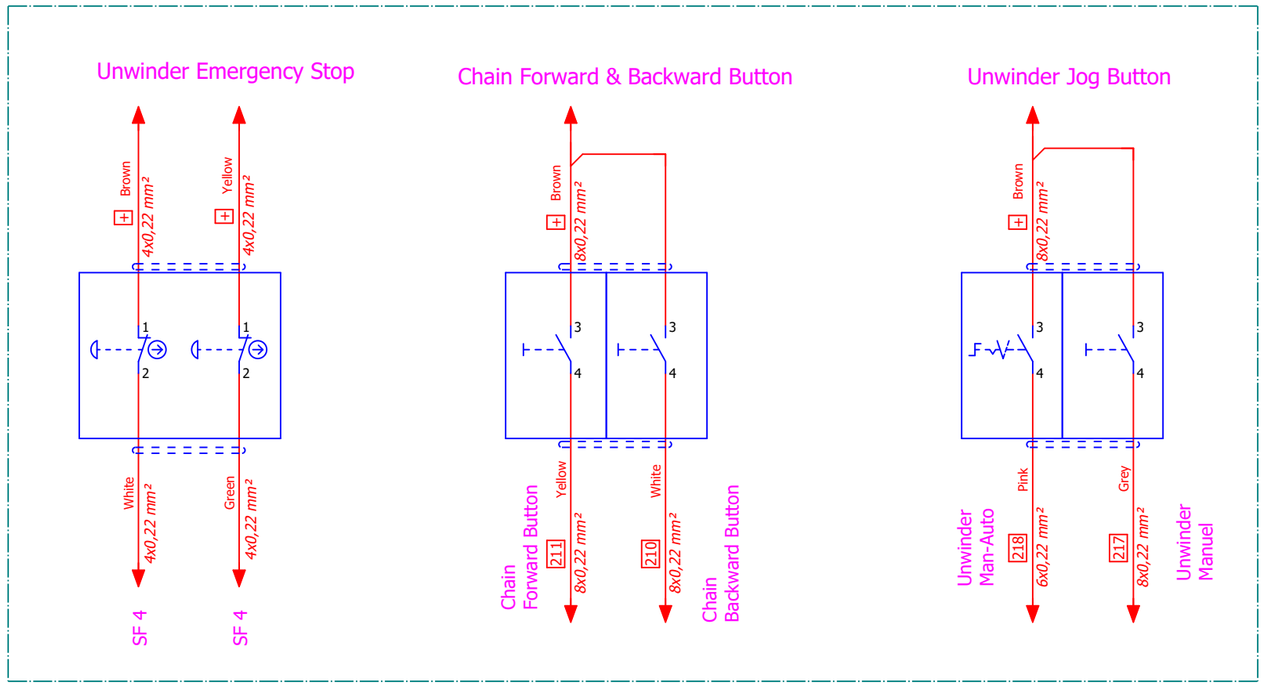

Project Version	v0.2	Author	OĞULCAN YILMAZ	GT FORM	**Güven Teknik Makina ve Kalıp Ind.Trade.Co.Ltd** Kavaklı Mah. Pamukova Sok. No:6 Silivri/İstanbul/Turkey +90 212 485 09 67 info@guventeknikmakina.com	**GT8065M**	Button Box Connection
Last Update	20/01/2025	Revision					Page : 41 /42

0	1	2	3	4	5	6	7	8	9

Stacker Supply 6 Contact Connection

X10

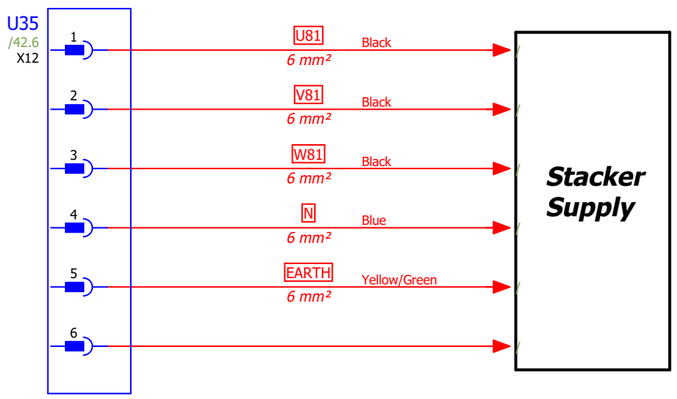

Unwinder Supply 6 Contact Connection

X20

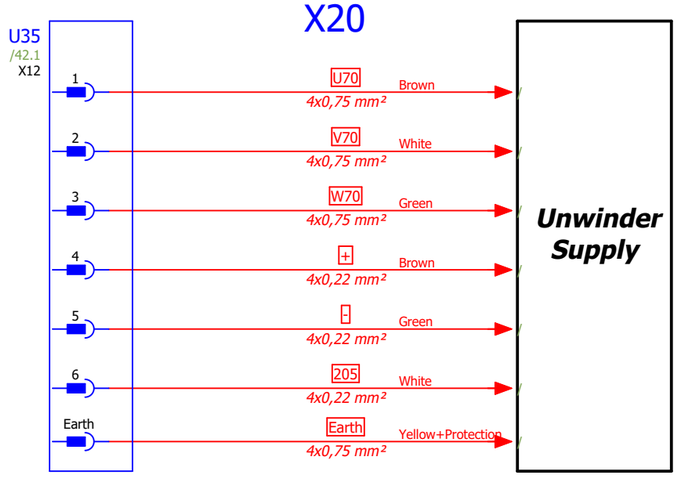

Project Version	v0.2	Author	OĞULCAN YILMAZ	GT FORM	**Güven Teknik Makina ve Kalıp Ind.Trade.Co.Ltd** Kavaklı Mah. Pamukova Sok. No:6 Silivri/İstanbul/Turkey +90 212 485 09 67 info@guventeknikmakina.com	**GT8065M**	SOCKET CONNECTIONS
Last Update	20/01/2025	Revision					Page : 42 /42