Güven Teknik Makina ve Kalıp Ind.Trade.Co.Ltd.
Kavaklı Mah. Pamukova Sok. No:6 Silivri/İstanbul/Turkey
+90 212 485 09 67
info@guventeknikmakina.com

GTS1000

3 & 4 İstasyonlu Makine / 3 & 4 Station Machine

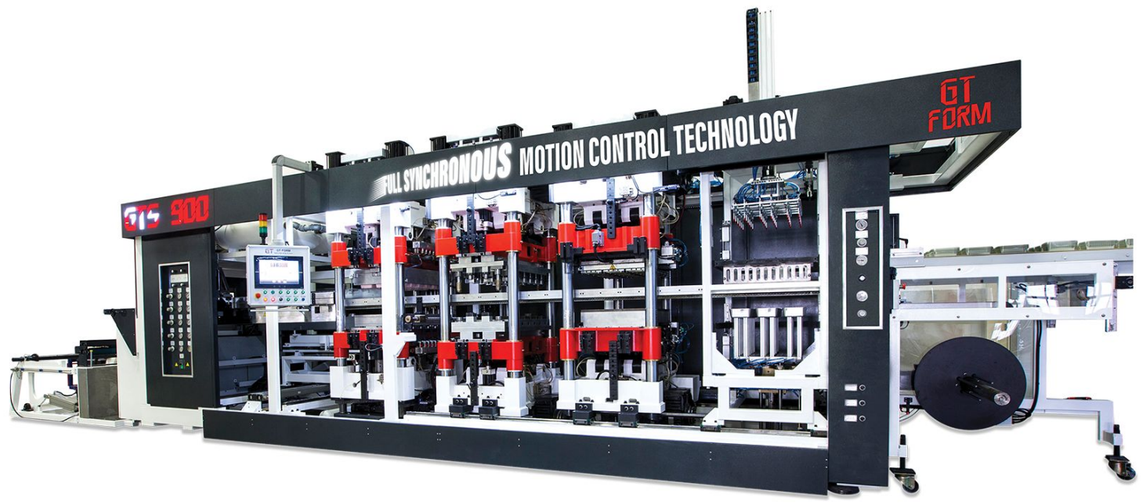

Elektrik Besleme / Electrical Supply :	380 V AC
Frekans / Frequency :	50 hZ
Besleme Kablosu / Supply Cable :	Minimum 5x70 mm² (3P + N +PE)
Toplam Güç / Total Power :	3 Station : 235 kVA / 4 Station : 245 kVA
Isıtıcı Gücü / Heaters Power :	190.4 kW
Ana Şalter / Main Circuit Breaker :	Schneider EZC250H3250

Cable Color Codes

AC Phase : Black	*General 24V DC : Brown*	*Control UPS 24V DC : Violet*	*Brake UPS 334V DC : Red*
AC Neutral : Blue	*General 0V DC : Green*	*Control UPS 0V DC : Green*	*Brake UPS 0V DC : Gray*
Earth : Yellow-Green			

Project Version : v0.2
Last Update : 13/11/2024

Number of pages 62

EN

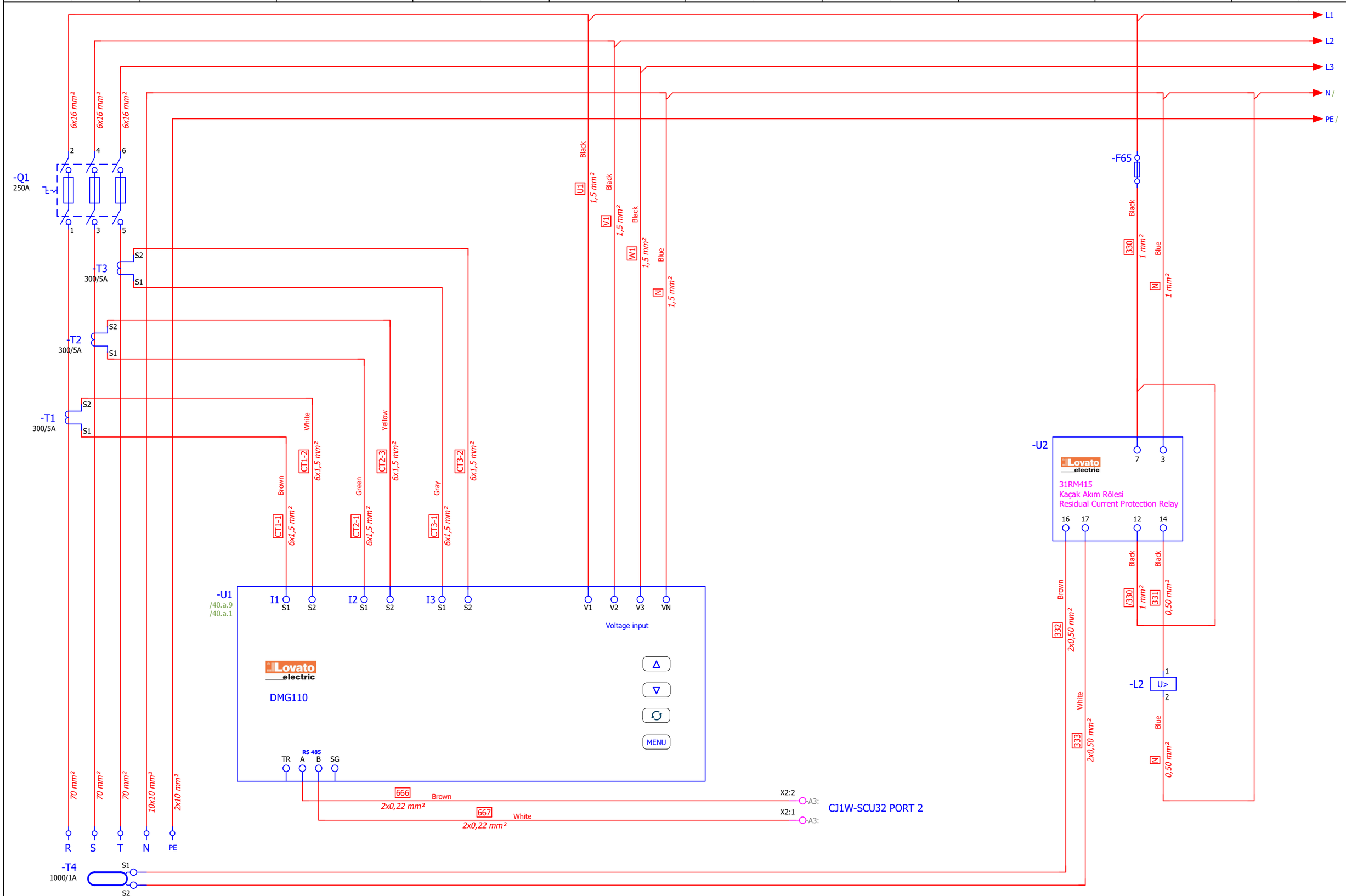

Project Version	v0.2	Author	Görkem Güray	GT FORM	**Güven Teknik Makina ve Kalıp Ind.Trade.Co.Ltd** Kavaklı Mah. Pamukova Sok. No:6 Silivri/İstanbul/Turkey +90 212 485 09 67 info@guventeknikmakina.com	**GTS1000**	MAIN SUPPLY
Last Update	13/11/2024	Revision	Berk Samat				Sayfa : 2 /62

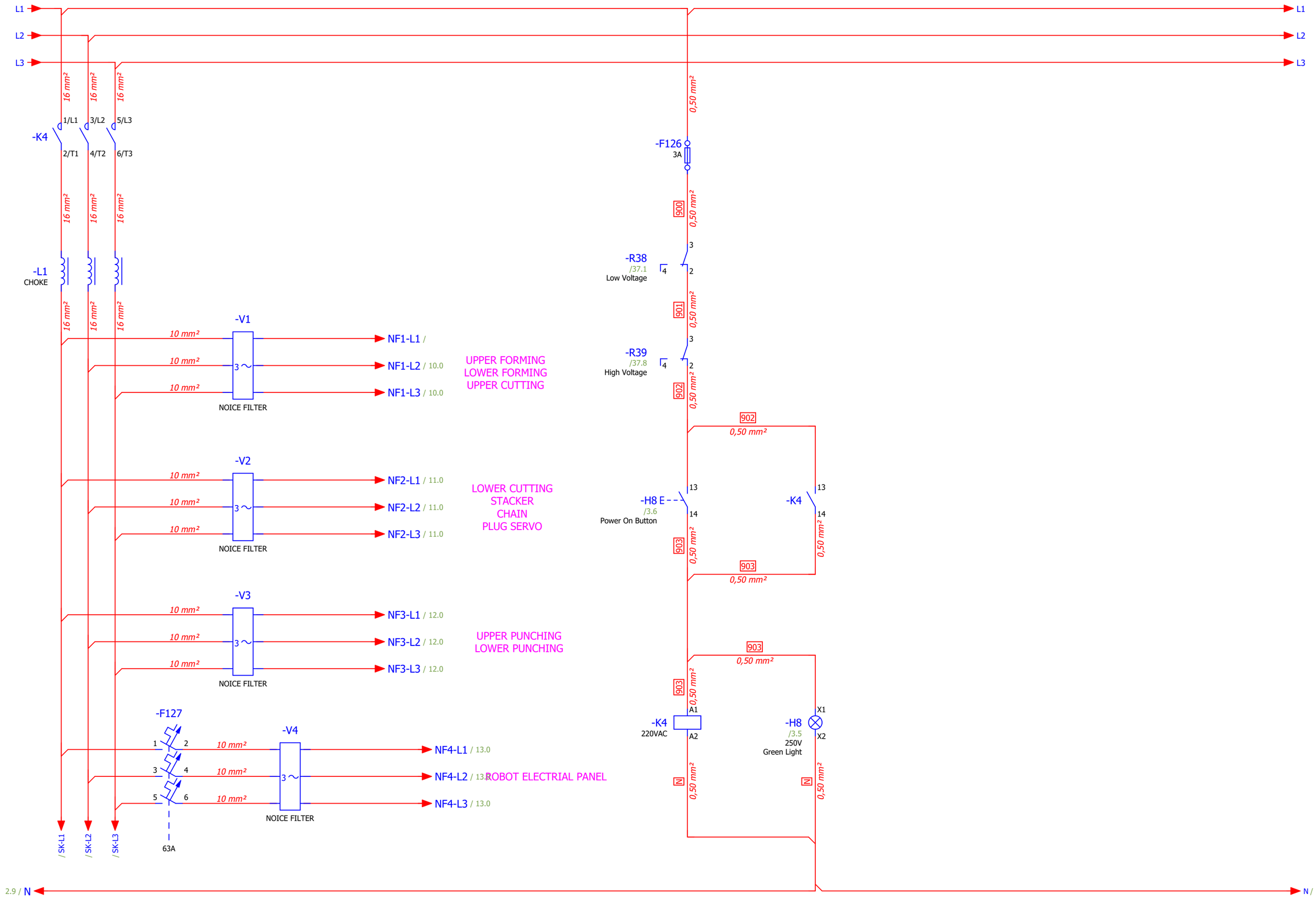

Project Version	v0.2	Author	Görkem Güray	GT FORM	**Güven Teknik Makina ve Kalıp Ind.Trade.Co.Ltd** Kavaklı Mah. Pamukova Sok. No:6 Silivri/İstanbul/Turkey +90 212 485 09 67 info@guventeknikmakina.com	**GTS1000**	VOLTAGE PROTECTION
Last Update	13/11/2024	Revision	Berk Samat				Sayfa : 3 /62

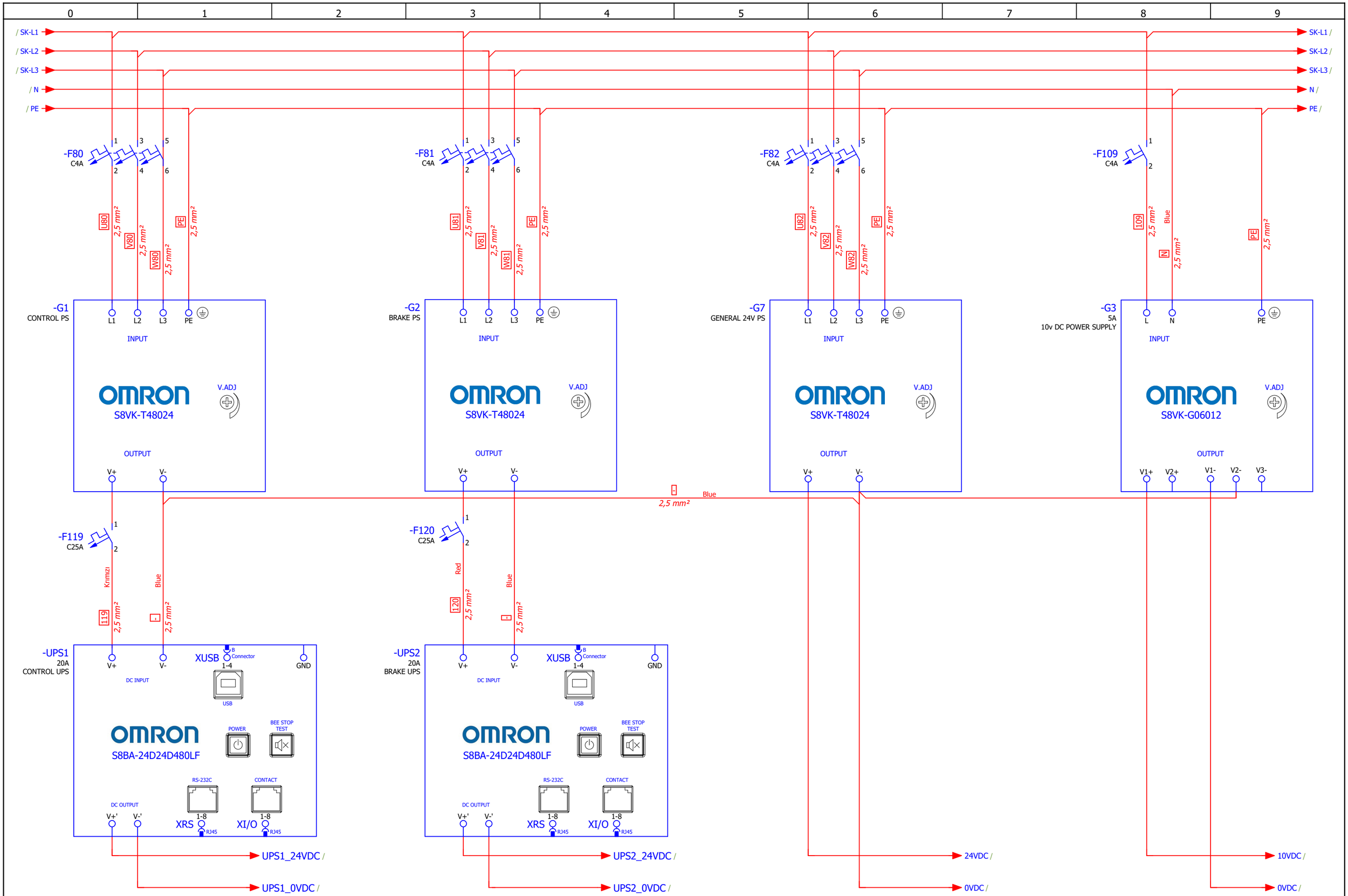

Project Version	v0.2	Author	Görkem Güray	GT FORM	**Güven Teknik Makina ve Kalıp Ind.Trade.Co.Ltd** Kavaklı Mah. Pamukova Sok. No:6 Silivri/İstanbul/Turkey +90 212 485 09 67 info@guventeknikmakina.com	**GTS1000**	CONTROL SUPPLY
Last Update	13/11/2024	Revision	Berk Samat				Sayfa : 4 /62

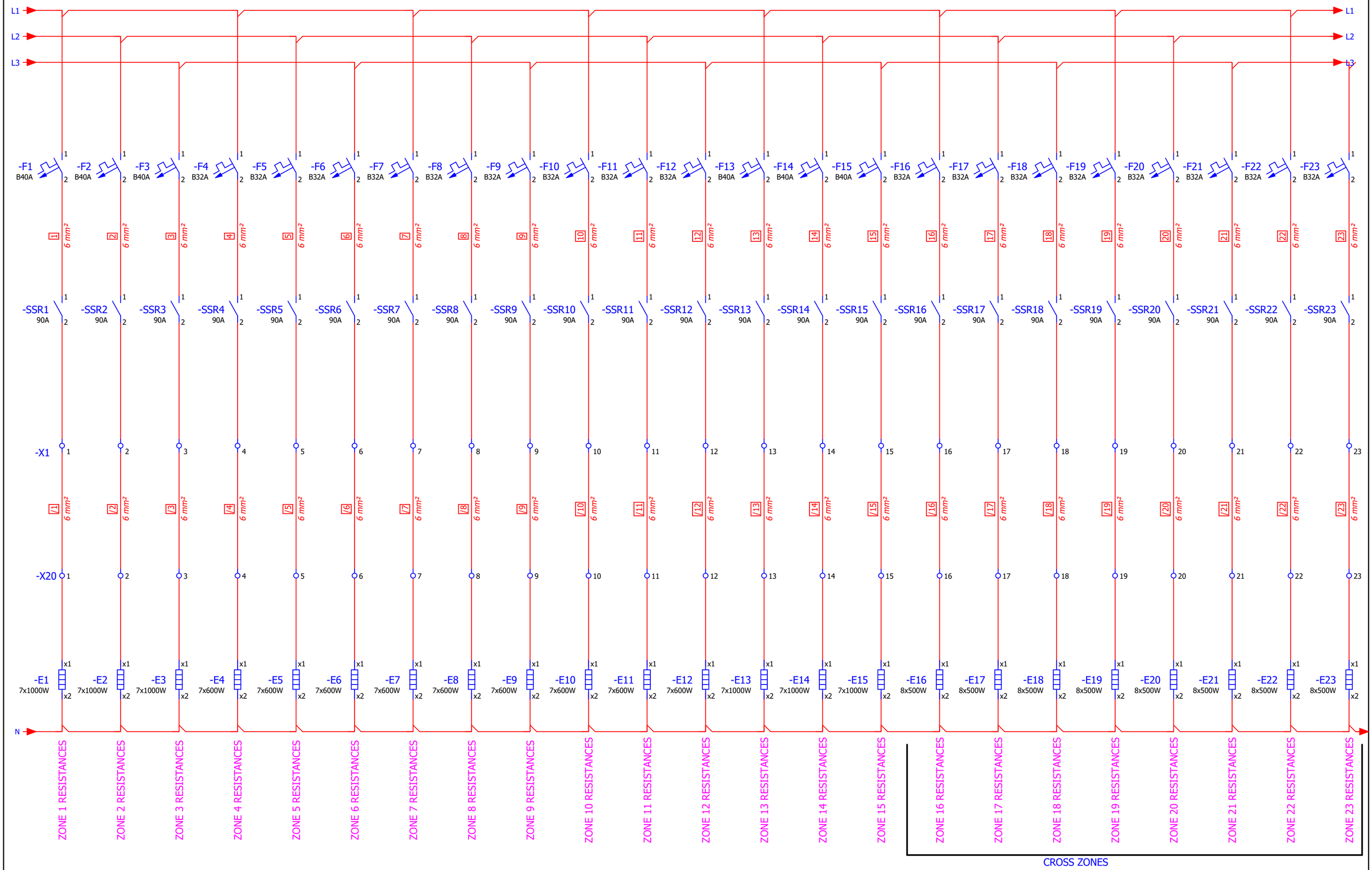

Project Version	v0.2	Author	Görkem Güray	GT FORM	**Güven Teknik Makina ve Kalıp Ind.Trade.Co.Ltd** Kavaklı Mah. Pamukova Sok. No:6 Silivri/İstanbul/Turkey +90 212 485 09 67 info@guventeknikmakina.com	**GTS1000**	UPPER HEATERS
Last Update	13/11/2024	Revision	Berk Samat				Sayfa : 5 /62

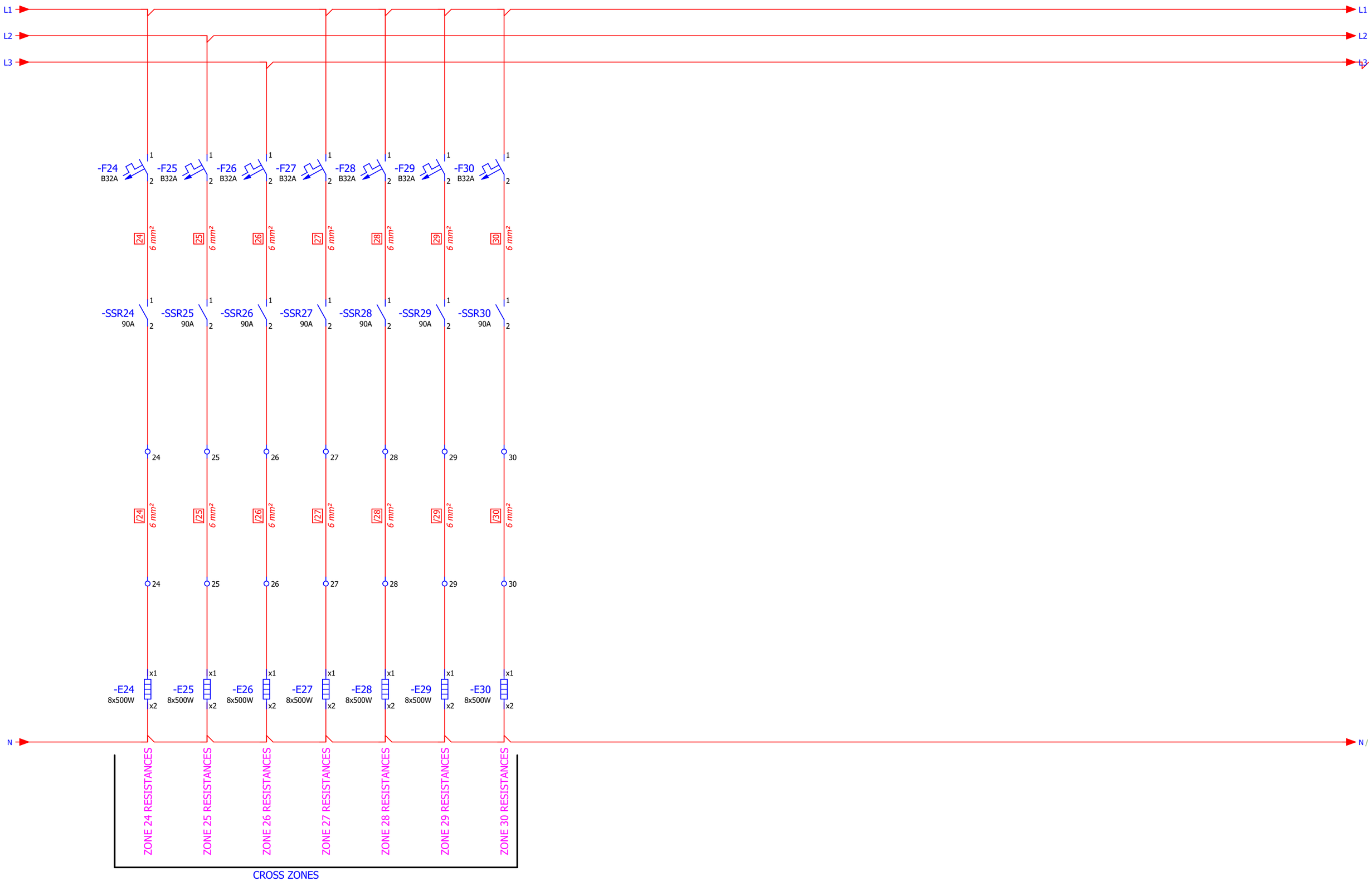

Project Version	v0.2	Author	Görkem Güray	GT FORM	**Güven Teknik Makina ve Kalıp Ind.Trade.Co.Ltd** Kavaklı Mah. Pamukova Sok. No:6 Silivri/İstanbul/Turkey +90 212 485 09 67 info@guventeknikmakina.com	**GTS1000**	UPPER HEATERS
Last Update	13/11/2024	Revision	Berk Samat				Sayfa : 6 /62

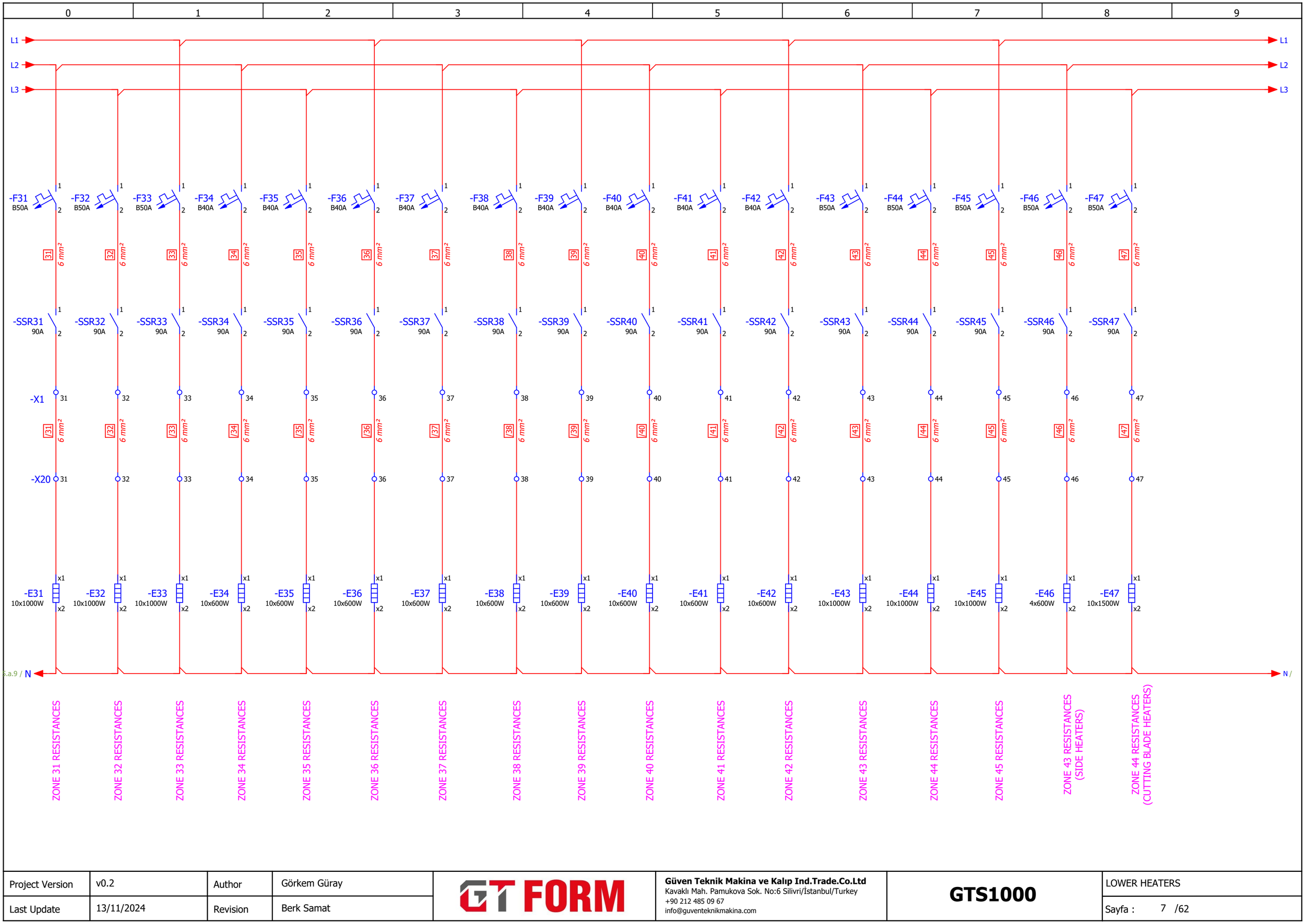

Project Version	v0.2	Author	Görkem Güray	GT FORM	**Güven Teknik Makina ve Kalıp Ind.Trade.Co.Ltd** Kavaklı Mah. Pamukova Sok. No:6 Silivri/İstanbul/Turkey +90 212 485 09 67 info@guventeknikmakina.com	**GTS1000**	LOWER HEATERS
Last Update	13/11/2024	Revision	Berk Samat				Sayfa : 7 /62

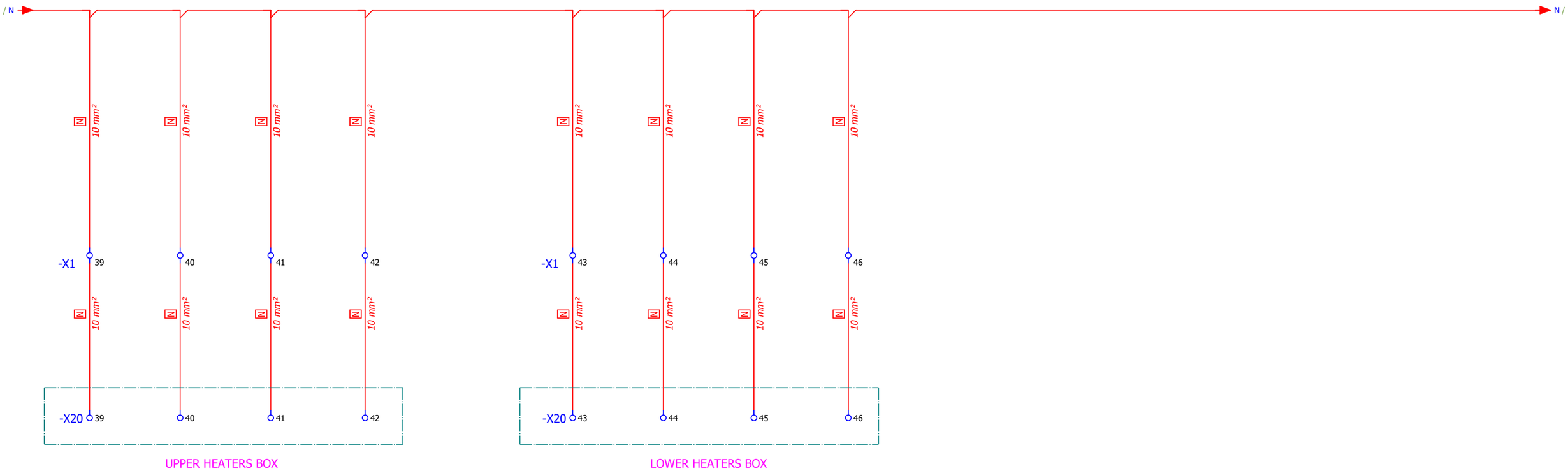

Project Version	v0.2	Author	Görkem Güray	GT FORM	**Güven Teknik Makina ve Kalıp Ind.Trade.Co.Ltd** Kavaklı Mah. Pamukova Sok. No:6 Silivri/İstanbul/Turkey +90 212 485 09 67 info@guventeknikmakina.com	**GTS1000**	HEATERS NEUTRAL
Last Update	13/11/2024	Revision	Berk Samat				Sayfa : 8 /62

TC1
NX-TC3405
MODULE 1

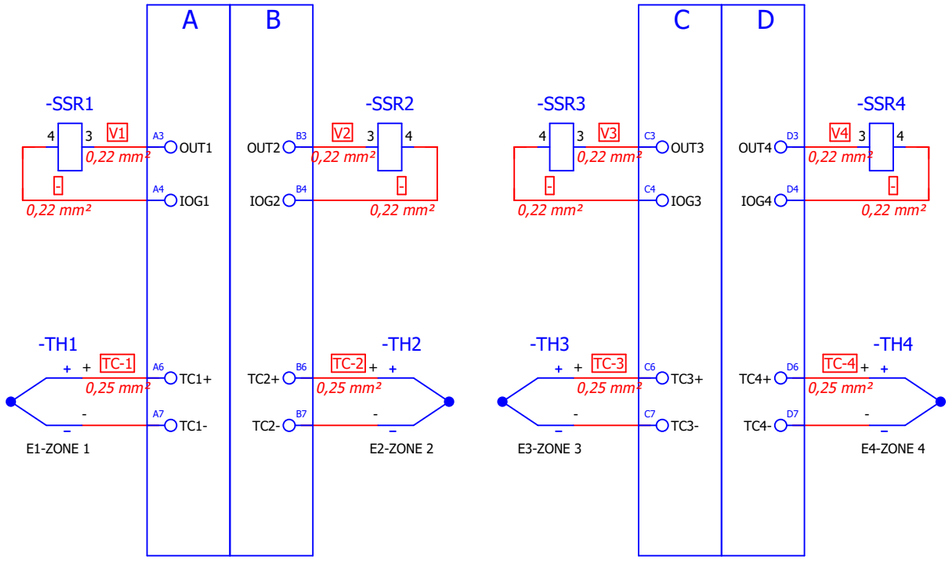

TC2
NX-TC3405
MODULE 2

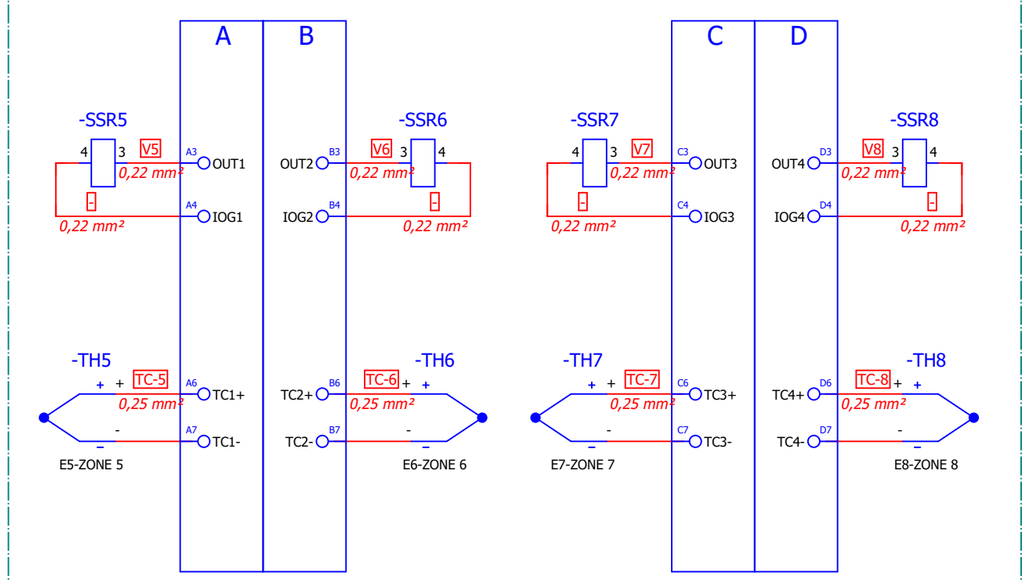

TC3
NX-TC3405
MODULE 3

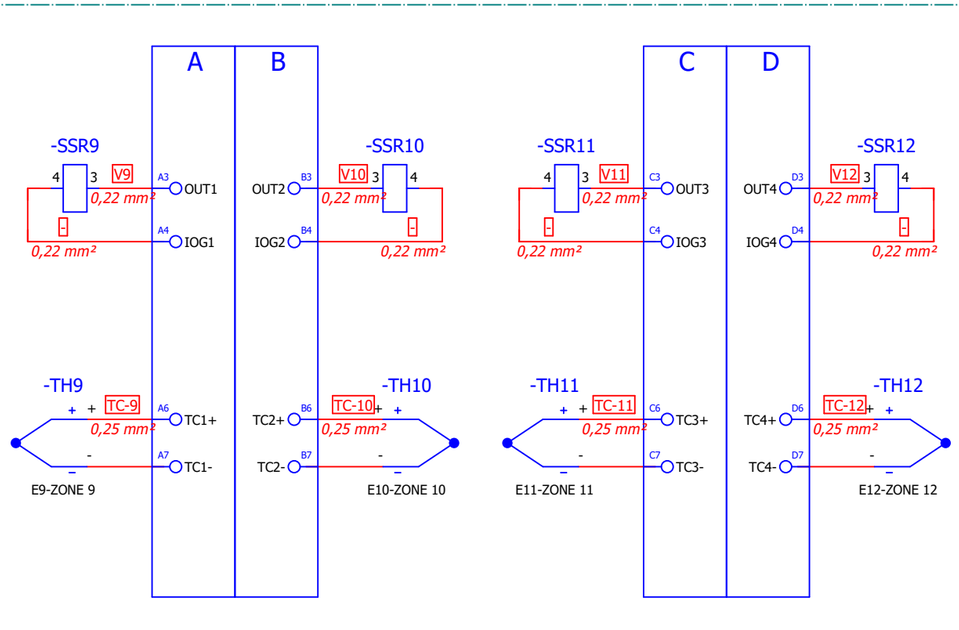

TC4
NX-TC3405
MODULE 4

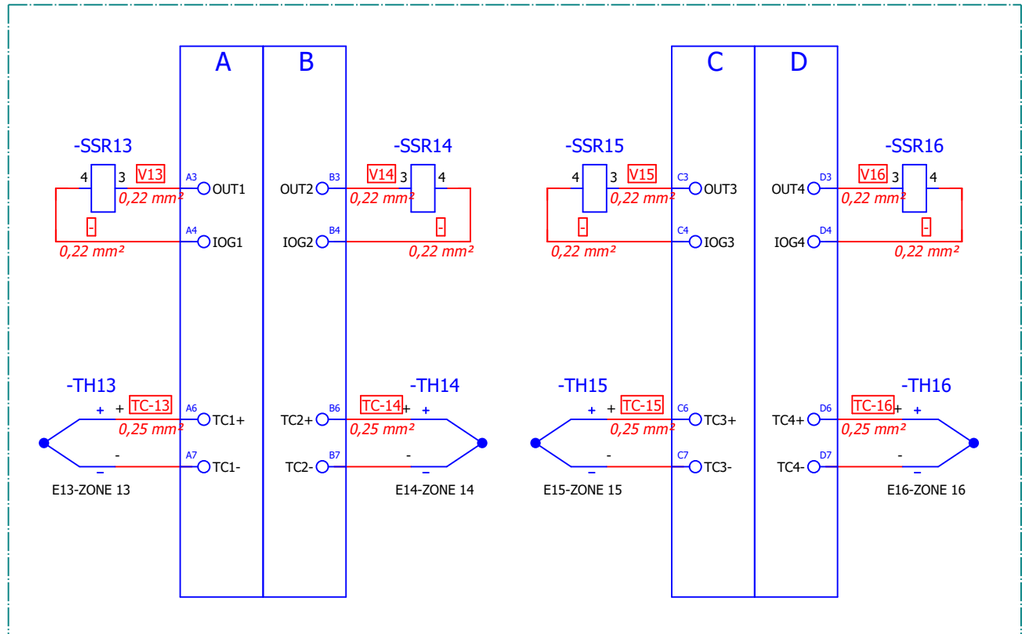

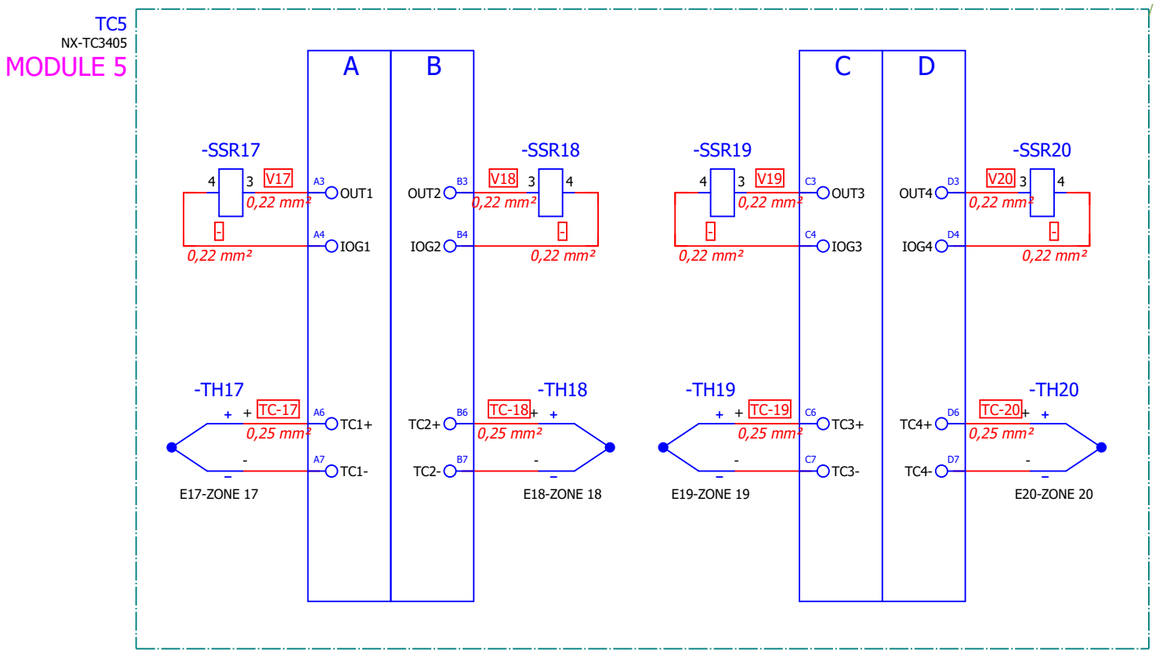

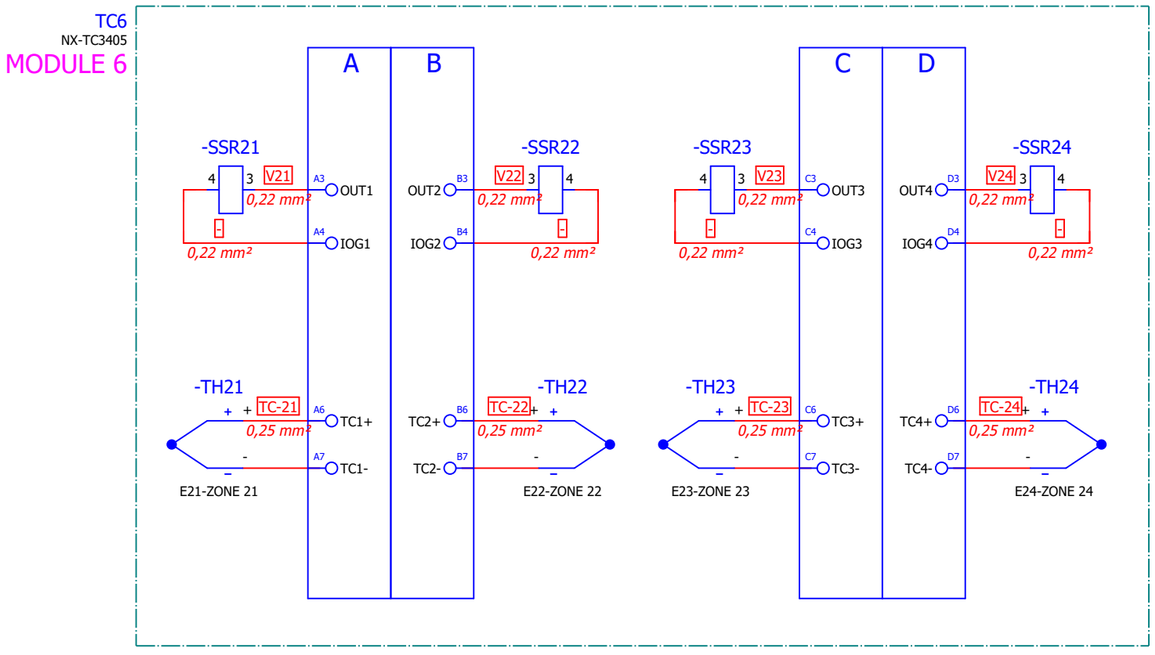

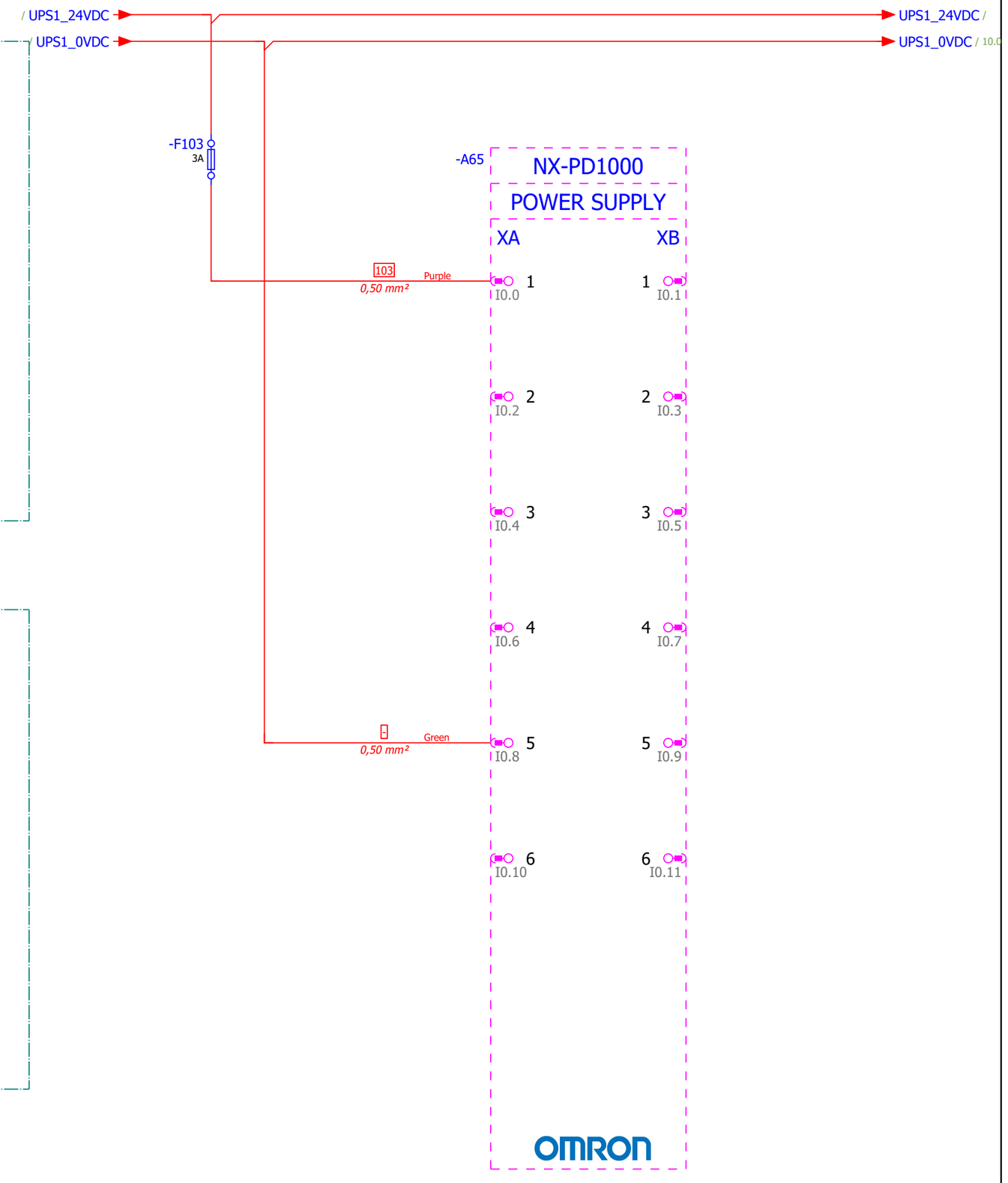

Project Version	v0.2	Author	Görkem Güray	GT FORM	**Güven Teknik Makina ve Kalıp Ind.Trade.Co.Ltd** Kavaklı Mah. Pamukova Sok. No:6 Silivri/İstanbul/Turkey +90 212 485 09 67 info@guventeknikmakina.com	**GTS1000**	TEMPERATURE CONTROL-2
Last Update	13/11/2024	Revision	Berk Samat				Sayfa : 10 /62

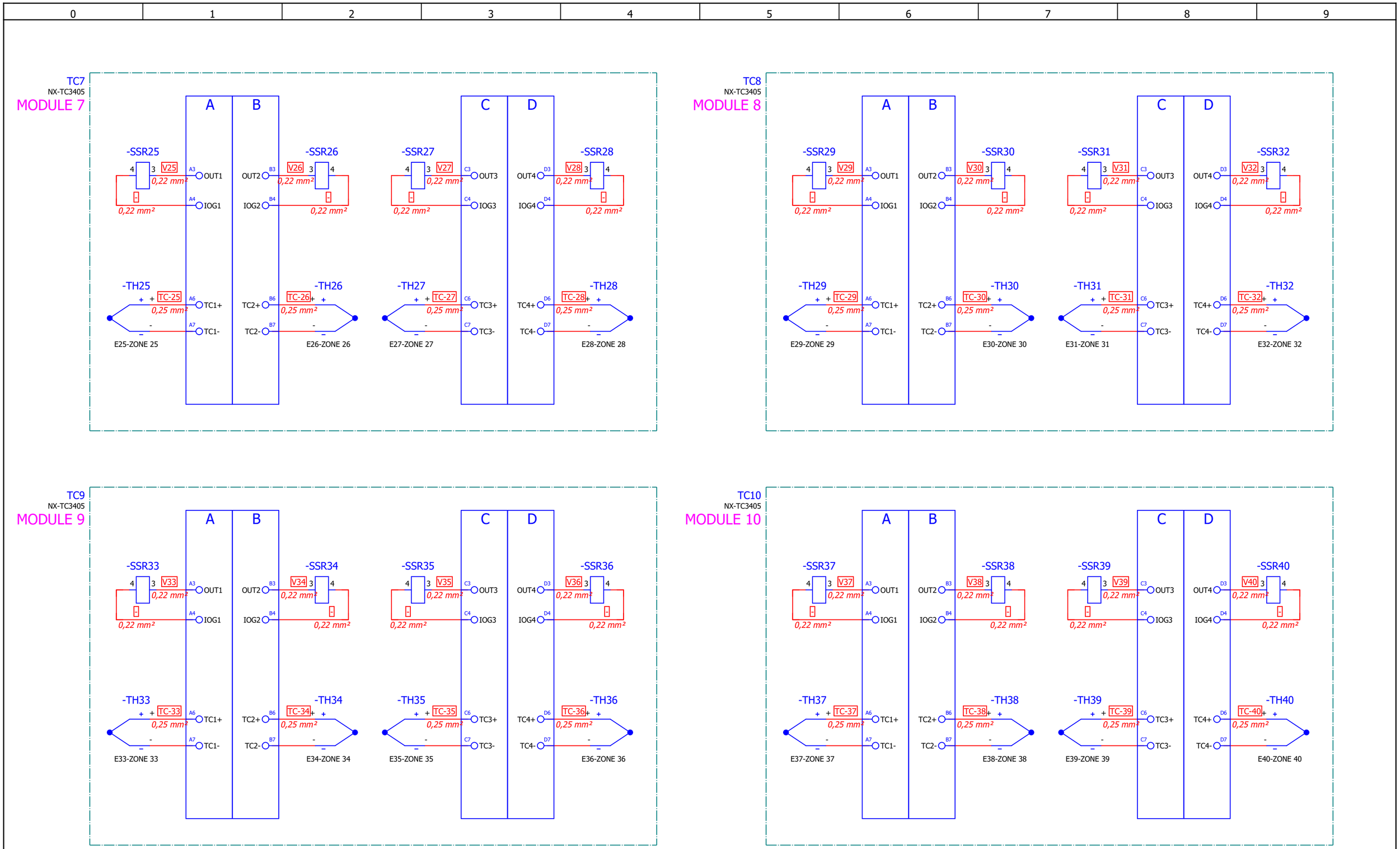

Project Version	v0.2	Author	Görkem Güray	GT FORM	**Güven Teknik Makina ve Kalıp Ind.Trade.Co.Ltd** Kavaklı Mah. Pamukova Sok. No:6 Silivri/İstanbul/Turkey +90 212 485 09 67 info@guventeknikmakina.com	**GTS1000**	TEMPERATURE CONTROL-3
Last Update	13/11/2024	Revision	Berk Samat				Sayfa : 11 /62

-TC11
NX-TC3405
MODULE 11

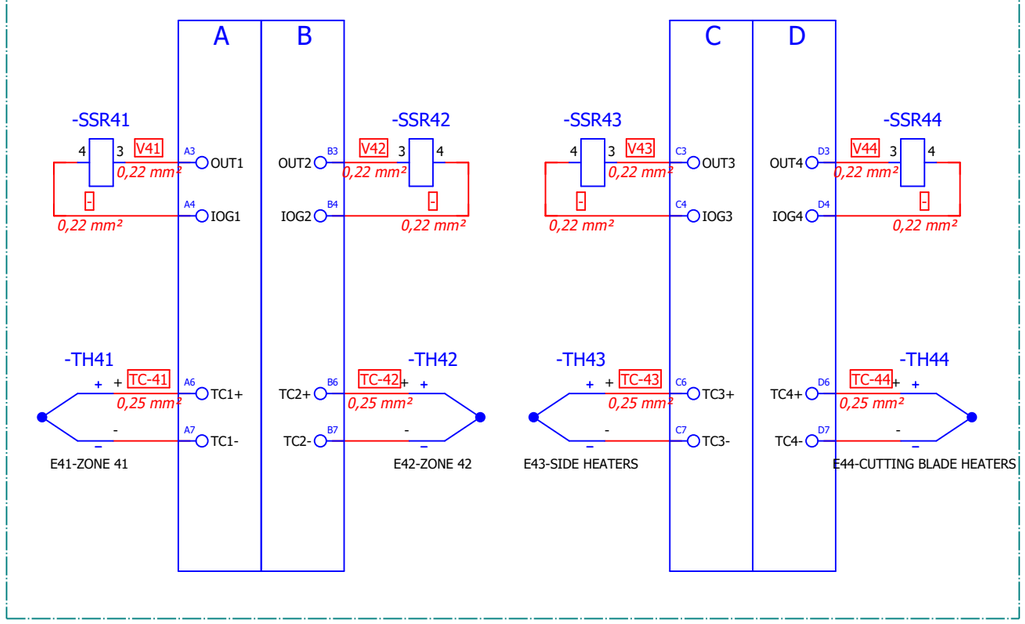

-TC12
NX-TC3405
MODULE 12

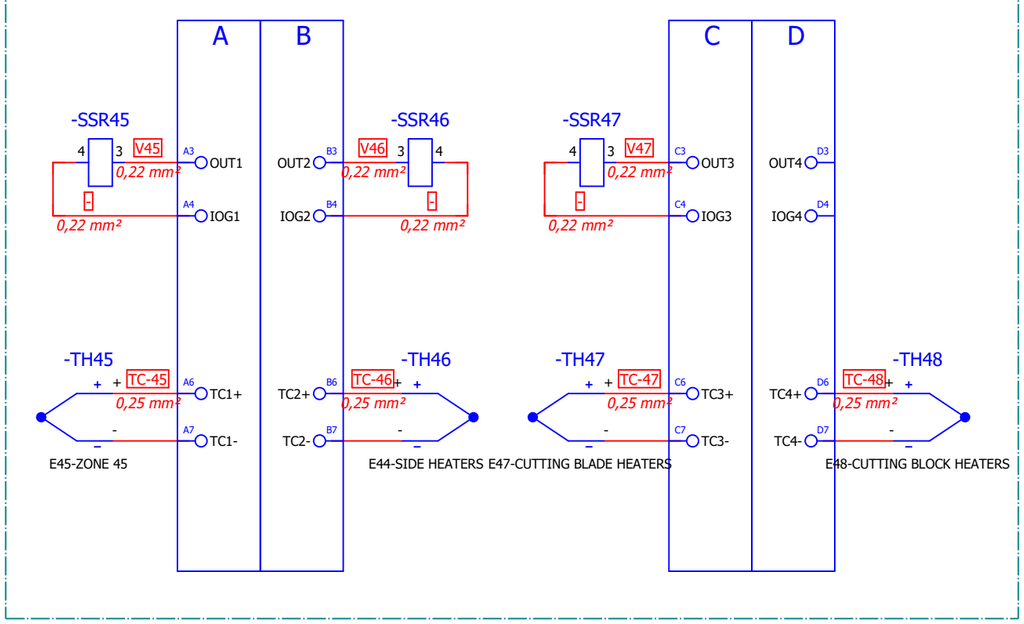

-TC13
NX-TC3405
MODULE 13

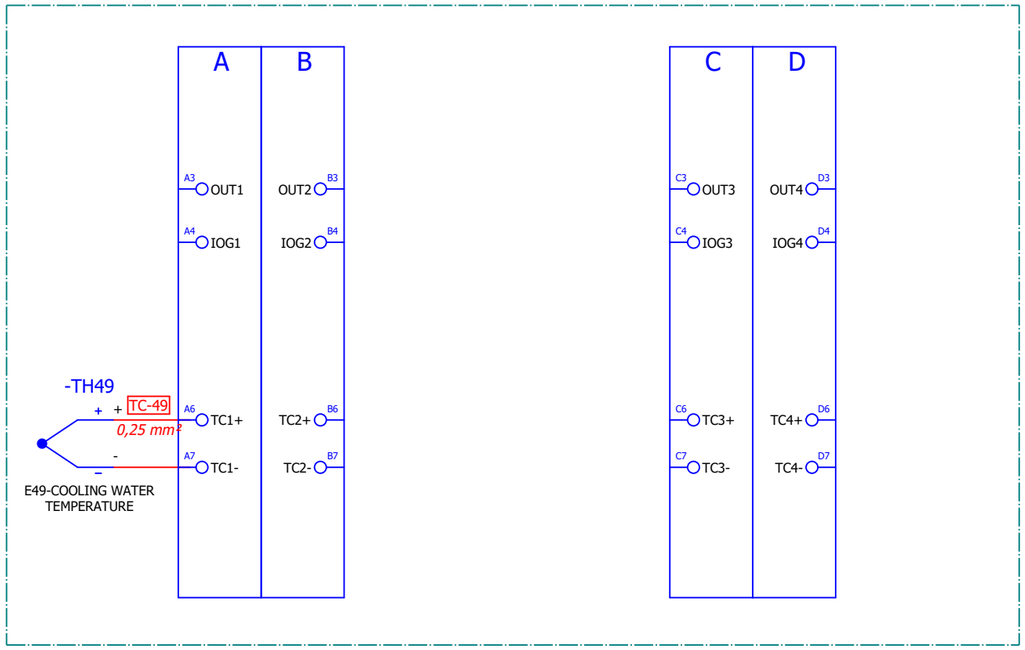

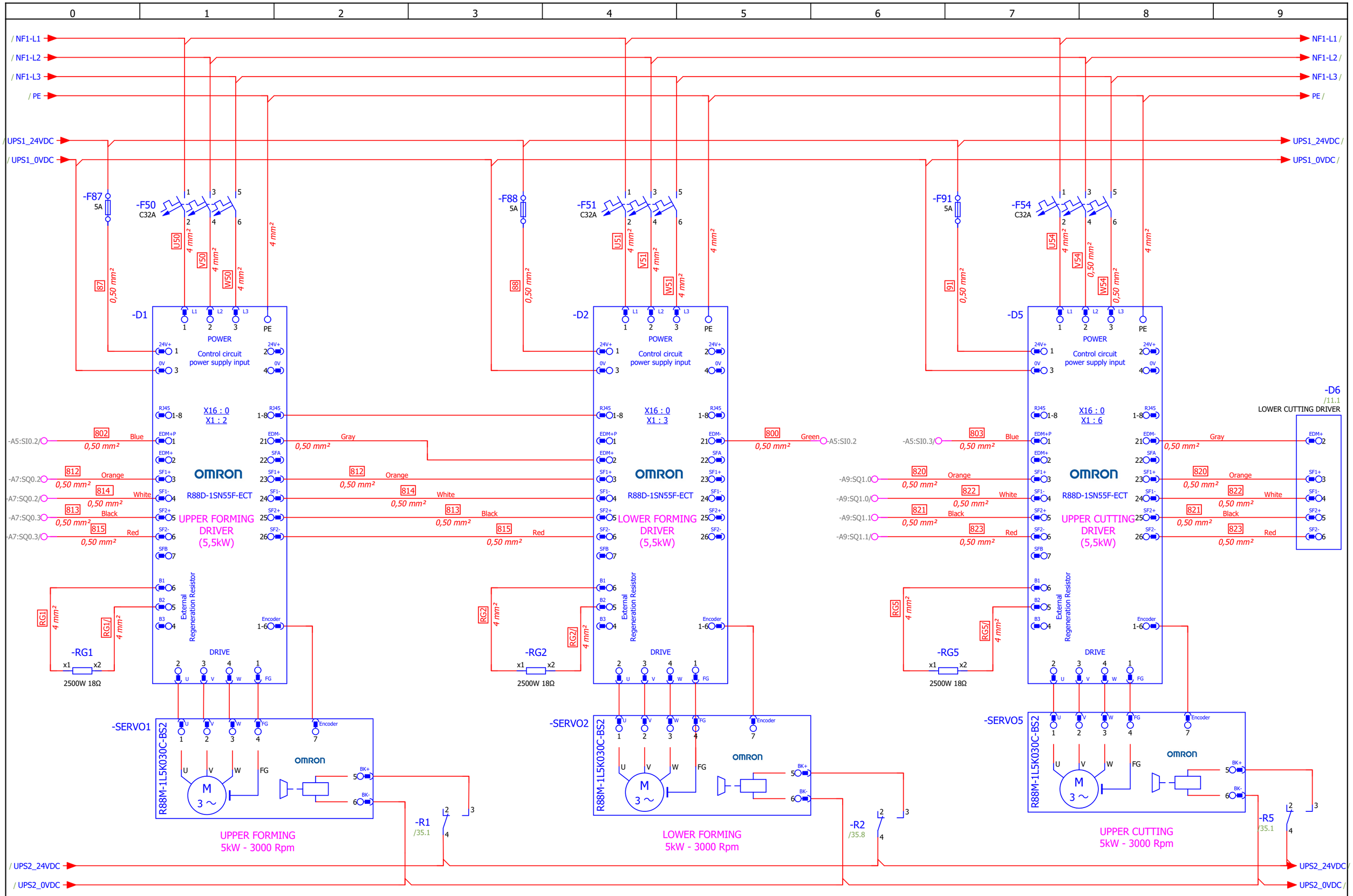

Project Version	v0.2	Author	Görkem Güray	GT FORM	**Güven Teknik Makina ve Kalıp Ind.Trade.Co.Ltd** Kavaklı Mah. Pamukova Sok. No:6 Silivri/İstanbul/Turkey +90 212 485 09 67 info@guventeknikmakina.com	**GTS1000**	SERVO-1
Last Update	13/11/2024	Revision	Berk Samat				Sayfa : 13 /62

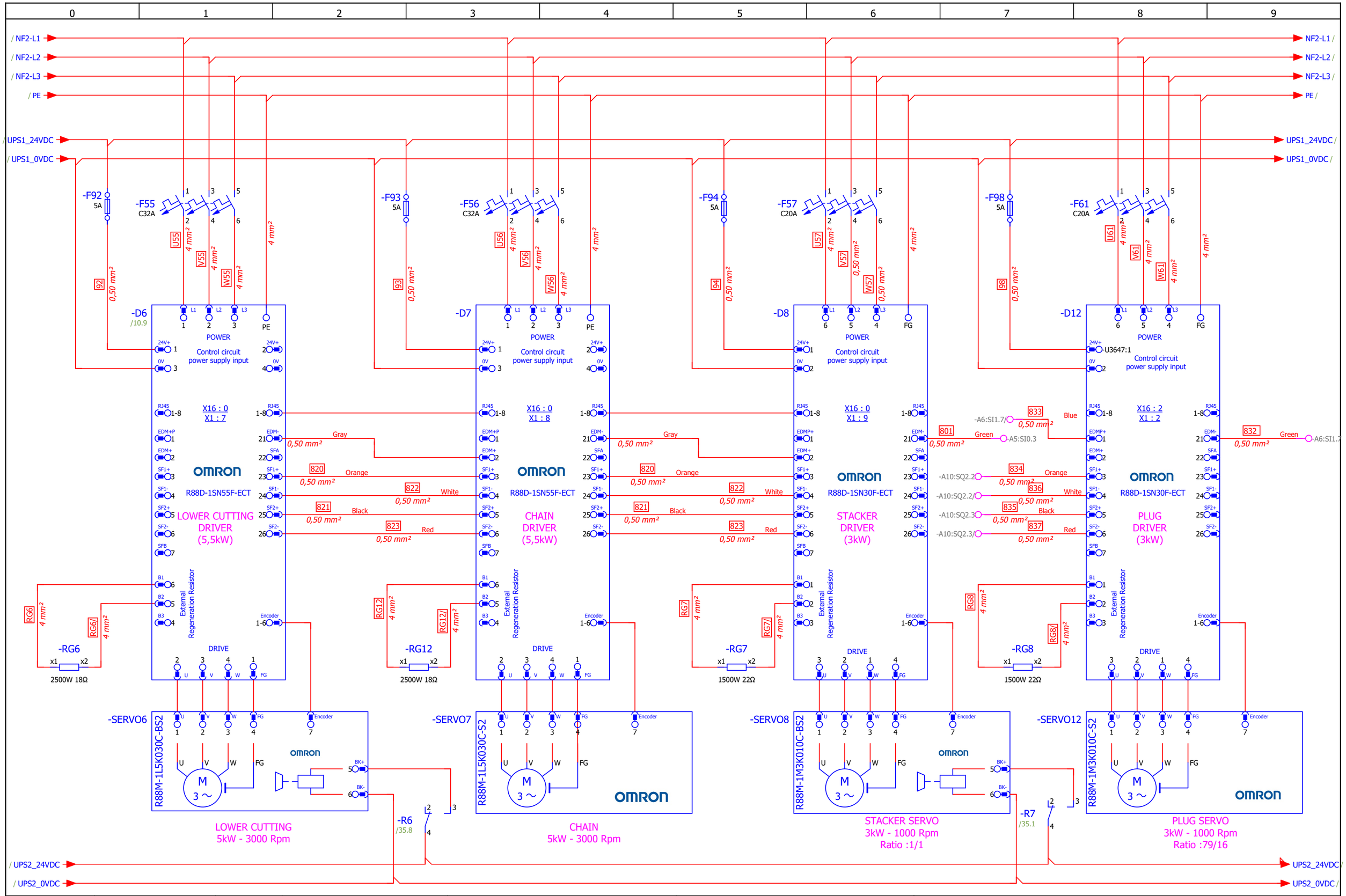

Project Version	v0.2	Author	Görkem Güray	GT FORM	**Güven Teknik Makina ve Kalıp Ind.Trade.Co.Ltd** Kavaklı Mah. Pamukova Sok. No:6 Silivri/İstanbul/Turkey +90 212 485 09 67 info@guventeknikmakina.com	**GTS1000**	SERVO-2
Last Update	13/11/2024	Revision	Berk Samat				Sayfa : 14 /62

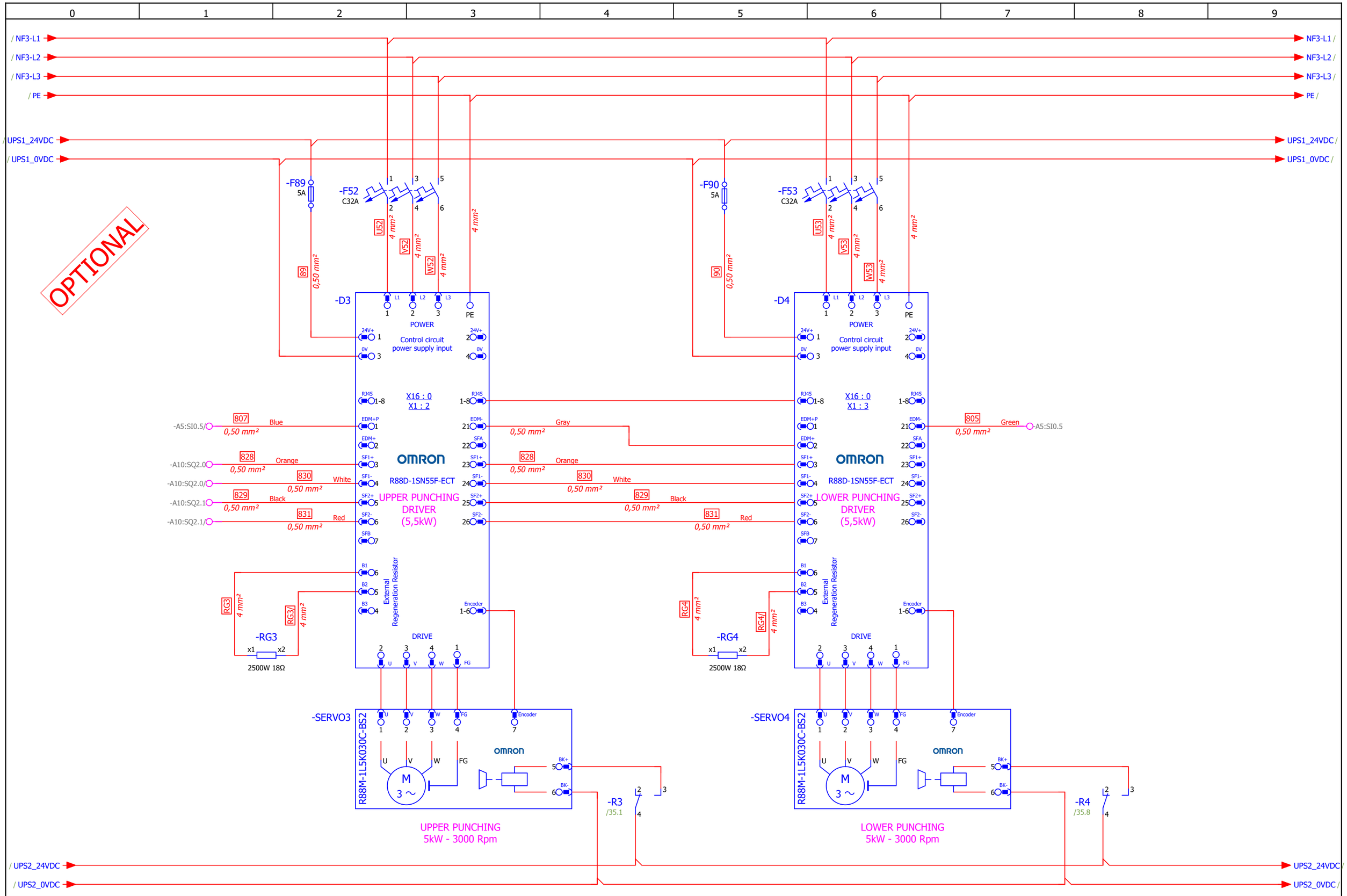

Project Version	v0.2	Author	Görkem Güray	GT FORM	**Güven Teknik Makina ve Kalıp Ind.Trade.Co.Ltd** Kavaklı Mah. Pamukova Sok. No:6 Silivri/İstanbul/Turkey +90 212 485 09 67 info@guventeknikmakina.com	**GTS1000**	SERVO-3
Last Update	13/11/2024	Revision	Berk Samat				Sayfa : 15 /62

0 | 1 | 2 | 3 | 4 | 5 | 6 | 7 | 8 | 9

/ NF4-L1 → NF4-L1 /
/ NF4-L2 → NF4-L2 /
/ NF4-L3 → NF4-L3 /
/ PE → PE /
/ UPS1_24VDC → UPS1_24VDC /
/ UPS1_0VDC → UPS1_0VDC /

-F95 5A | -F58 C20A | -F96 5A | -F59 C20A | -F97 5A | -F60 C20A

95 0,50 mm² | U58 4 mm² | V58 4 mm² | W58 4 mm² | 4 mm²
96 0,50 mm² | U59 4 mm² | V59 4 mm² | W59 4 mm² | 4 mm²
97 0,50 mm² | U60 4 mm² | V60 0,50 mm² | W60 0,50 mm² | 4 mm²

-D9 | -D10 | -D11
L1 L2 L3 FG
POWER
24V+ 0V
Control circuit power supply input

X16 : 1 / X1 : F
X16 : 2 / X1 : 0
X16 : 2 / X1 : 1

RJ45 1-8 | EDMP+ EDM+ SF1+ SF1- SF2+ SF2- SFB | EDM- SFA SF1+ SF1- SF2+ SF2- | B1 B2 B3 External Regeneration Resistor | Encoder 1-6

-A5:SI0.4/ 806 Gray 6x0,22 mm² — 0,50 mm² Gray — 804 Pink 6x0,22 mm² /A5:SI0.4
-A9:SQ1.2/ 824 Brown 6x0,22 mm² — 824 Orange 0,50 mm² — 824 Orange 0,50 mm²
-A9:SQ1.2/ 826 White 6x0,22 mm² — 826 White 0,50 mm² — 826 White 0,50 mm²
-A9:SQ1.3/ 825 Green 6x0,22 mm² — 825 Black 0,50 mm² — 825 Black 0,50 mm²
-A9:SQ1.3/ 827 Yellow 6x0,22 mm² — 827 Red 0,50 mm² — 827 Red 0,50 mm²

OMRON
R88D-1SN30F-ECT — ROBOT X DRIVER (3kW)
R88D-1SN30F-ECT — ROBOT Z DRIVER (3kW)
R88D-1SN20F-ECT — ROBOT W DRIVER (3kW)

RG9 4 mm² | -RG9 x1 x2 1500W 22Ω | RG9 4 mm²
RG10 4 mm² | -RG10 x1 x2 1500W 22Ω | RG10 4 mm²
RG11 4 mm² | -RG11 x1 x2 1500W 22Ω | RG11 4 mm²

DRIVE 3 2 1 4 U V W FG

OPTIONAL
-SERVO9 R88M-1M3K010C-BS2 — ROBOT X AXIS 3kW - 1000 Rpm Ratio :11718/2185
-SERVO10 R88M-1L3K030C-BS2 — ROBOT Z AXIS 3kW - 3000 Rpm Ratio :5
-SERVO11 R88M-1L2K030C-BS2 — ROBOT W AXIS 2kW - 3000 Rpm Ratio :20

BK+ 5 BK- 6

-R8 /35.8 | -R9 /35.1 | -R10 /35.8

/ UPS2_24VDC → UPS2_24VDC /
/ UPS2_0VDC → UPS2_0VDC /

Project Version	v0.2	Author	Görkem Güray	GT FORM	**Güven Teknik Makina ve Kalıp Ind.Trade.Co.Ltd** Kavaklı Mah. Pamukova Sok. No:6 Silivri/İstanbul/Turkey +90 212 485 09 67 info@guventeknikmakina.com	**GTS1000**	SERVO-4
Last Update	13/11/2024	Revision	Berk Samat				Sayfa : 16 /62

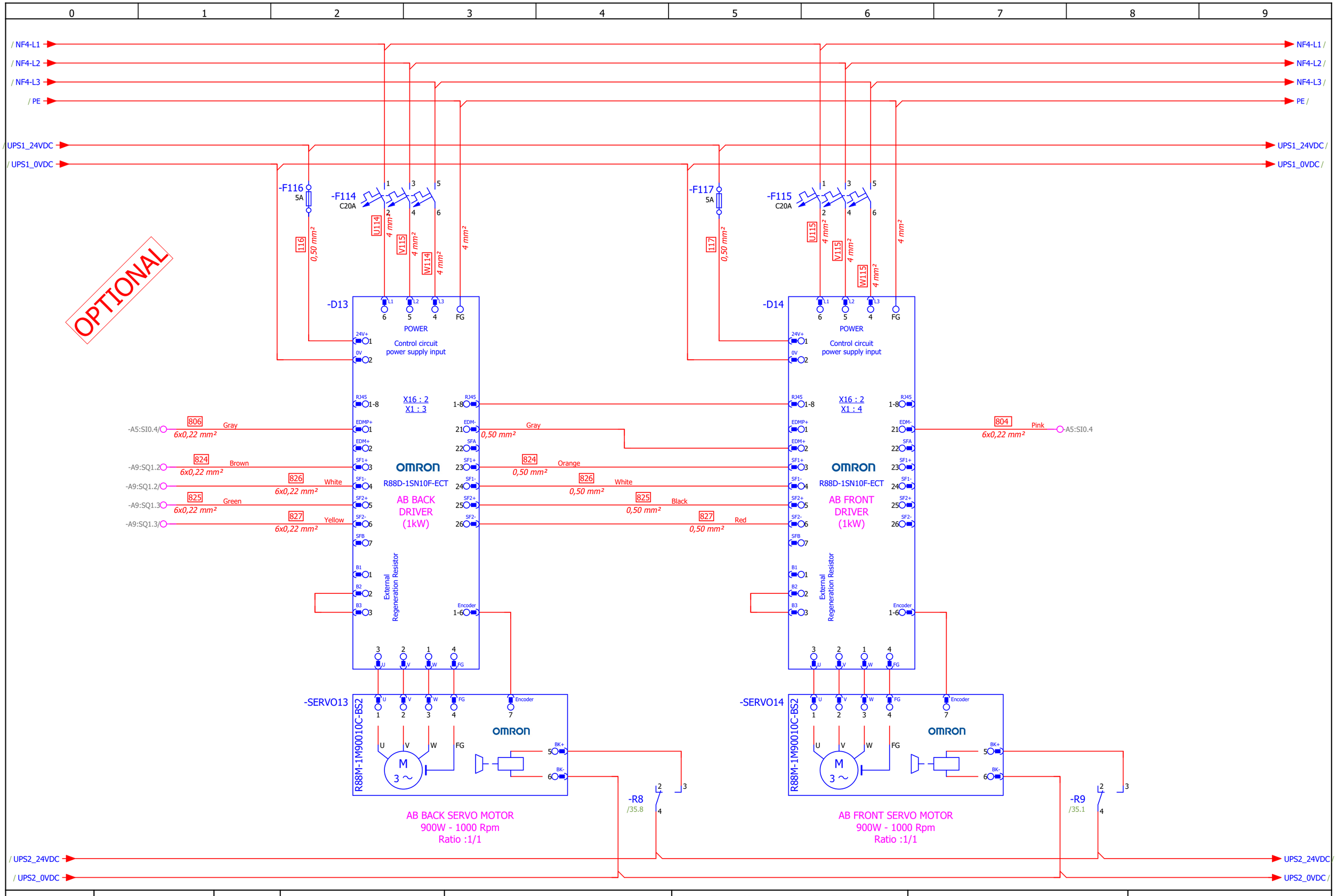

Project Version	v0.2	Author	Görkem Güray	GT FORM	**Güven Teknik Makina ve Kalıp Ind.Trade.Co.Ltd** Kavaklı Mah. Pamukova Sok. No:6 Silivri/İstanbul/Turkey +90 212 485 09 67 info@guventeknikmakina.com	**GTS1000**	SERVO-5
Last Update	13/11/2024	Revision	Berk Samat				Sayfa : 17 /62

/ SK-L1
/ SK-L2
/ SK-L3
/ N
PE

SK-L1 /
SK-L2 /
SK-L3 /
N /
PE /

-F62
C16A

-F63
C16A

-F64
C16A

-F65
/2.8
C16A

62 1,5 mm² N 1,5 mm² PE 1,5 mm²

63 1,5 mm² N 1,5 mm² PE 1,5 mm²

64 1,5 mm² N 1,5 mm² PE 1,5 mm²

65 2,5 mm² N 1,5 mm²

-INV1
2,2 kW
FORMING
UPPER PRESS

-INV2
2,2 kW
FORMING
LOWER PRESS

-INV3
2,2 kW
PUNCHING
UPPER PRESS

-INV4
2,2 kW
CUTTING
UPPER PRESS

R/L1 S/L2 T/L3 G

POWER

PTC +10 AI1 AIC DI1 DI2 DI3 DI4

DO1 DOC DI5 DI6 DI7 DIC

P24 0 SF1 SF2

ROA ROB ROC

PIA PIB PIZ DIC +24 +24

OMRON
3G3M1-AB022-ECT

X16 : 1
X1 : 0

X16 : 1
X1 : 1

X16 : 1
X1 : 2

X16 : 1
X1 : 3

DRIVE

U/T1 V/T2 W/T3 G'

U62 1,5 mm² V62 1,5 mm² W62 1,5 mm² PE 1,5 mm²

U63 1,5 mm² V63 1,5 mm² W63 1,5 mm² PE 1,5 mm²

U64 1,5 mm² V64 1,5 mm² W64 1,5 mm² PE 1,5 mm²

/U65 2,5 mm² /V65 2,5 mm² /W65 2,5 mm² PE 2,5 mm²

-X2 1 2 3 4 PE

-X2 5 6 7 8 PE

-X2 9 10 11 12 PE

-X2 13 14 15 16 PE

2002-1201 2002-1201 2002-1201 2002-1207

U1 V1 W1 PE

-M1 M 3 ~

-M2 M 3 ~

-M3 M 3 ~

-M4 M 3 ~

UPPER FORMING
PRESS MOTOR
1,1kW
1455/20 Rpm
Ratio : 71.420

LOWER FORMING
PRESS MOTOR
1,1kW
1455/20 Rpm
Ratio : 71.420

UPPER PUNCHING
PRESS MOTOR
1,1kW
1455/20 Rpm
Ratio : 71.420

UPPER CUTTING
PRESS MOTORU
1,1kW
1455/20 Rpm
Ratio : 71.420

Project Version	v0.2	Author	Görkem Güray	GT FORM	**Güven Teknik Makina ve Kalıp Ind.Trade.Co.Ltd** Kavaklı Mah. Pamukova Sok. No:6 Silivri/İstanbul/Turkey +90 212 485 09 67 info@guventeknikmakina.com	**GTS1000**	FREQUENCY INVERTER-1
Last Update	13/11/2024	Revision	Berk Samat				Sayfa : 18 /62

/ SK-L1 — SK-L1 /
/ SK-L2 — SK-L2 /
/ SK-L3 — SK-L3 /
/ N — N /
PE — PE /

-F66
C10A
1
2
66 1,5 mm² — N 1,5 mm² — PE 1,5 mm²

-INV5
0,40 kW
WASTE ROLLER
R/L1 S/L2 T/L3 G
POWER
PTC +10 AI1 AIC DI1 DI2 DI3 DI4
DO1 DOC DI5 DI6 DI7 DIC
P24 0 SF1 SF2
ROA ROB ROC
PIA PIB PIZ DIC +24 +24
OMRON
3G3M1-AB004-ECT
X16 : 1
X1 : 4
DRIVE
U/T1 V/T2 W/T3 G'

U66 1,5 mm² — V66 1,5 mm² — W66 1,5 mm² — PE 1,5 mm²

-X2
5 6 7 8 PE
2002-1201 2002-1201 2002-1201 2002-1207
U1 V1 W1 PE
-M5
M
3 ~

WASTE ROLLER
MOTOR
0,75kW
957/131 Rpm
Ratio : 7.28

White U622 0,22 mm²
Brown 622 0,22 mm²
11
14 12
-R23
/36.1

-F67
C16A
1
2
67 1,5 mm² — N 1,5 mm² — PE 1,5 mm²

-INV6
0,75 kW
UNWINDER
R/L1 S/L2 T/L3 G
POWER
PTC +10 AI1 AIC DI1 DI2 DI3 DI4
DO1 DOC DI5 DI6 DI7 DIC
P24 0 SF1 SF2
ROA ROB ROC
PIA PIB PIZ DIC +24 +24
OMRON
3G3M1-AB007-ECT
X16 : 1
X1 : 5
DRIVE
U/T1 V/T2 W/T3 G'

U67 1,5 mm² — V67 1,5 mm² — W67 1,5 mm² — PE 1,5 mm²

-X2
9 10 11 12 PE
2002-1201 2002-1201 2002-1201 2002-1207
U1 V1 W1 PE
-M6
M
3 ~

UNWINDER
MOTOR
0,75kW
1435/71 Rpm
Ratio : 20.33

Project Version	v0.2	Author	Görkem Güray	GT FORM	**Güven Teknik Makina ve Kalıp Ind.Trade.Co.Ltd** Kavaklı Mah. Pamukova Sok. No:6 Silivri/İstanbul/Turkey +90 212 485 09 67 info@guventeknikmakina.com	**GTS1000**	FREQUENCY INVERTER-2
Last Update	13/11/2024	Revision	Berk Samat				Sayfa : 19 /62

/ SK-L1 — / SK-L2 — / SK-L3 — / N — PE

SK-L1 / — SK-L2 / — SK-L3 / — N / — PE /

-F68 C10A — -F69 C10A — -F70 C10A

68 — 1,5 mm² N — 1,5 mm² PE — 1,5 mm²

69 — 1,5 mm² N — 1,5 mm² PE — 1,5 mm²

70 — 1,5 mm² N — 1,5 mm² PE — 1,5 mm²

-INV7 0,4 kW FRONT SHEET STRETCHING

-INV8 0,4 kW MIDDLE SHEET STRETCHING

-INV9 0,4 kW REAR SHEET STRETCHING

R/L1 S/L2 T/L3 G — POWER

PTC +10 AI1 AIC DI1 DI2 DI3 DI4

/639 White 0,50 mm² — -R40 /37.1 — 12 14 — 639 Brown 0,50 mm² — 11

DO1 DOC DI5 DI6 DI7 DIC — P24 0 SF1 SF2

ROA ROB ROC — PIA PIB PIZ DIC +24 +24

OMRON 3G3M1-AB004-ECT — DRIVE — U/T1 V/T2 W/T3 G'

X16 : 1 X1 : 6 — X16 : 1 X1 : 7 — X16 : 1 X1 : 8

708 7x0,25 mm² Yellow — 707 7x0,25 mm² Green — 706 7x0,25 mm²

711 7x0,25 mm² Yellow — 710 7x0,25 mm² Green — 709 7x0,25 mm²

714 7x0,25 mm² Yellow — 713 7x0,25 mm² Green — 712 7x0,25 mm²

U68 1,5 mm² — V68 1,5 mm² — W68 1,5 mm² — PE 1,5 mm²

U69 1,5 mm² — V69 1,5 mm² — W69 1,5 mm² — PE 1,5 mm²

U70 1,5 mm² — V70 1,5 mm² — W70 1,5 mm² — PE 1,5 mm²

-X2 25 26 27 28 PE — 2002-1201 — 2002-1207

-X2 29 30 31 32 PE — 2002-1201 — 2002-1207

-X2 33 34 35 36 PE — 2002-1201 — 2002-1207

-M7 M 3 ~ U1 V1 W1 PE

-M8 M 3 ~ U1 V1 W1 PE

-M9 M 3 ~ U1 V1 W1 PE

-BG4 500 Puls Encoder — -BG5 500 Puls Encoder — -BG6 500 Puls Encoder

Z- B- A- Z B A — US — GND — DBS50E-S5EK00500 SICK Sensor Intelligence

FRONT SHEET STRETCHING MOTOR 0,37kW 1390 Rpm Ratio : 30

MIDDLE SHEET STRETCHING MOTOR 0,37kW 1390 Rpm Ratio : 30

REAR SHEET STRETCHING MOTOR 0,37kW 1390 Rpm Ratio : 30

4.7 / 24VDC — 24VDC /

17.9 / 0VDC — 0VDC /

Project Version	v0.2	Author	Görkem Güray	GT FORM	**Güven Teknik Makina ve Kalıp Ind.Trade.Co.Ltd** Kavaklı Mah. Pamukova Sok. No:6 Silivri/İstanbul/Turkey +90 212 485 09 67 info@guventeknikmakina.com	**GTS1000**	FREQUENCY INVERTER-3
Last Update	13/11/2024	Revision	Berk Samat				Sayfa : 20 /62

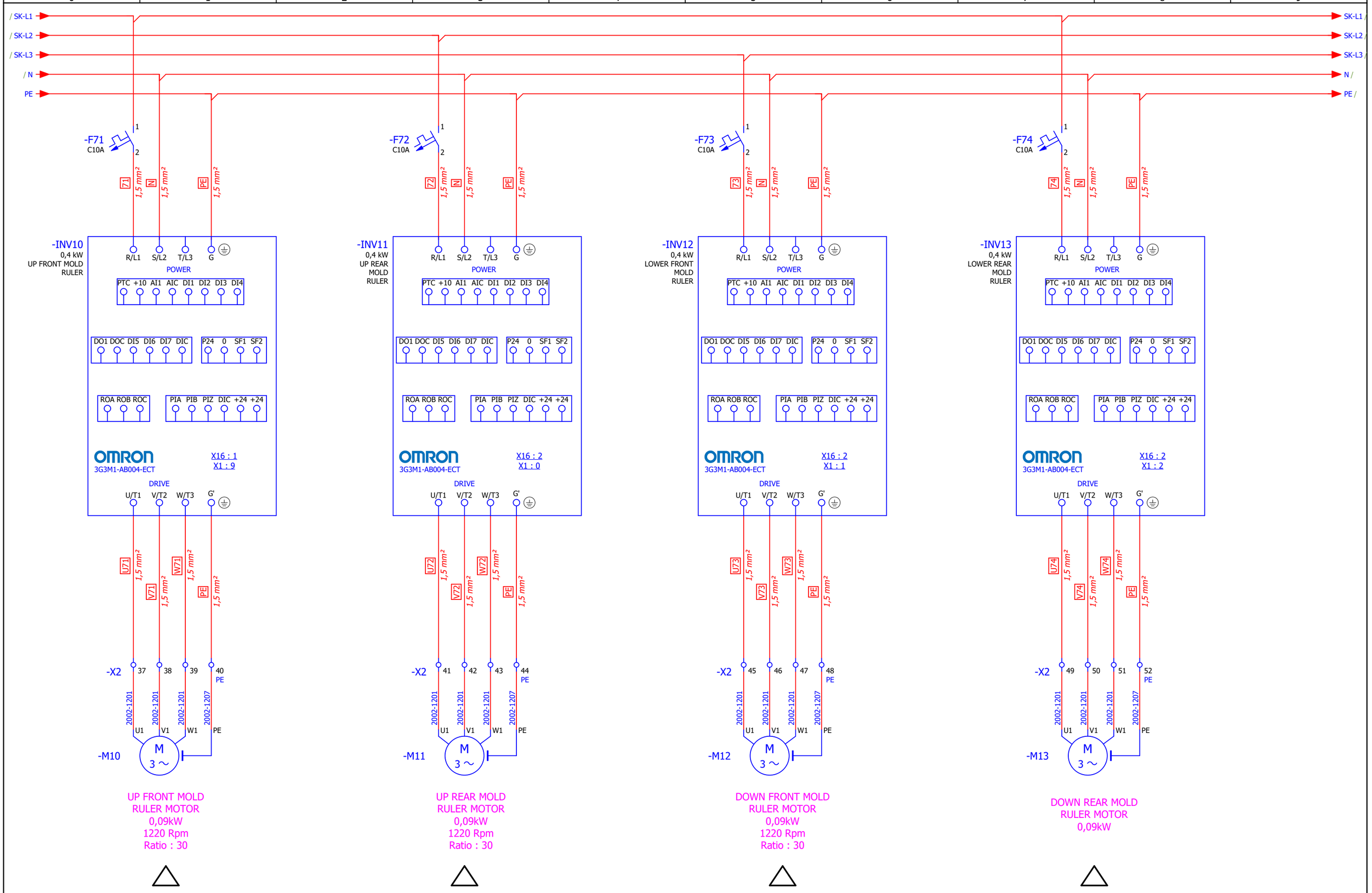

Project Version	v0.2	Author	Görkem Güray	GT FORM	**Güven Teknik Makina ve Kalıp Ind.Trade.Co.Ltd** Kavaklı Mah. Pamukova Sok. No:6 Silivri/İstanbul/Turkey +90 212 485 09 67 info@guventeknikmakina.com	**GTS1000**	FREQUENCY INVERTER-4
Last Update	13/11/2024	Revision	Berk Samat				Sayfa : 21 /62

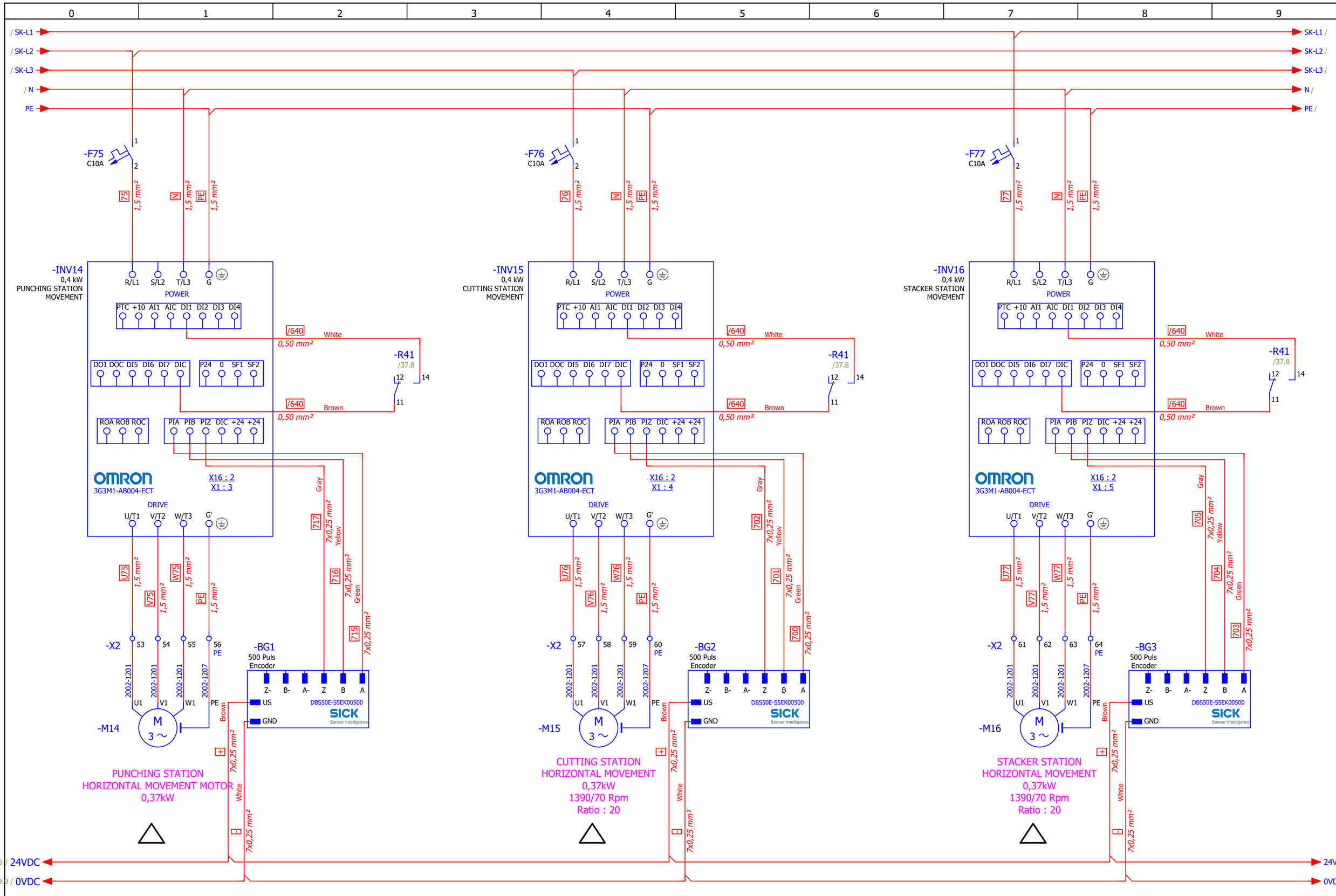

Project Version	v0.2	Author	Görkem Güray	GT FORM	**Güven Teknik Makina ve Kalıp Ind.Trade.Co.Ltd** Kavaklı Mah. Pamukova Sok. No:6 Silivri/İstanbul/Turkey +90 212 485 09 67 info@guventeknikmakina.com	**GTS1000**	FREQUENCY INVERTER-5
Last Update	13/11/2024	Revision	Berk Samat				Sayfa : 22 /62

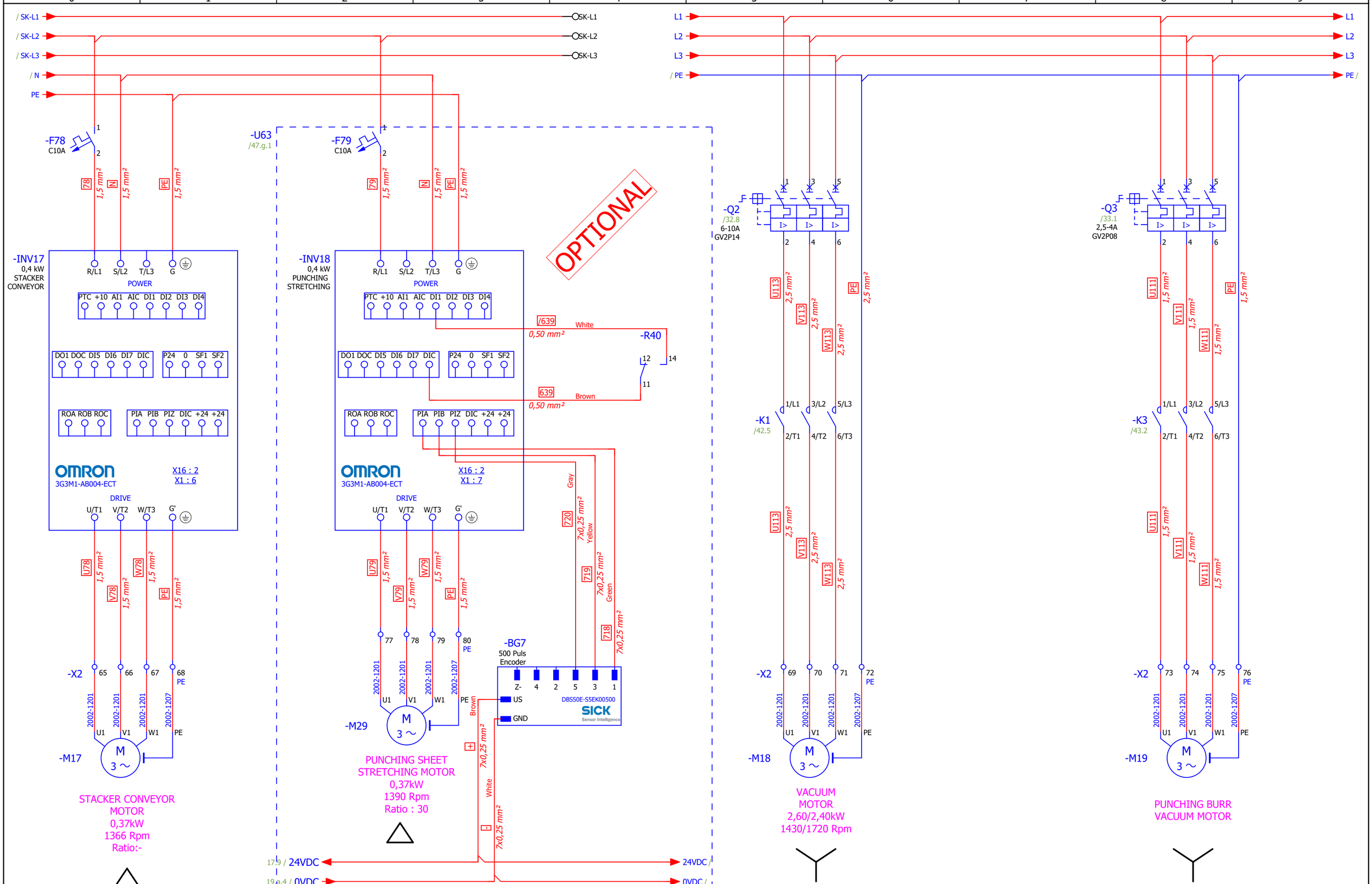

Project Version	v0.2	Author	Görkem Güray	GT FORM	**Güven Teknik Makina ve Kalıp Ind.Trade.Co.Ltd** Kavaklı Mah. Pamukova Sok. No:6 Silivri/İstanbul/Turkey +90 212 485 09 67 info@guventeknikmakina.com	**GTS1000**	FREQUENCY INVERTER-6
Last Update	13/11/2024	Revision	Berk Samat				Sayfa : 23 /62

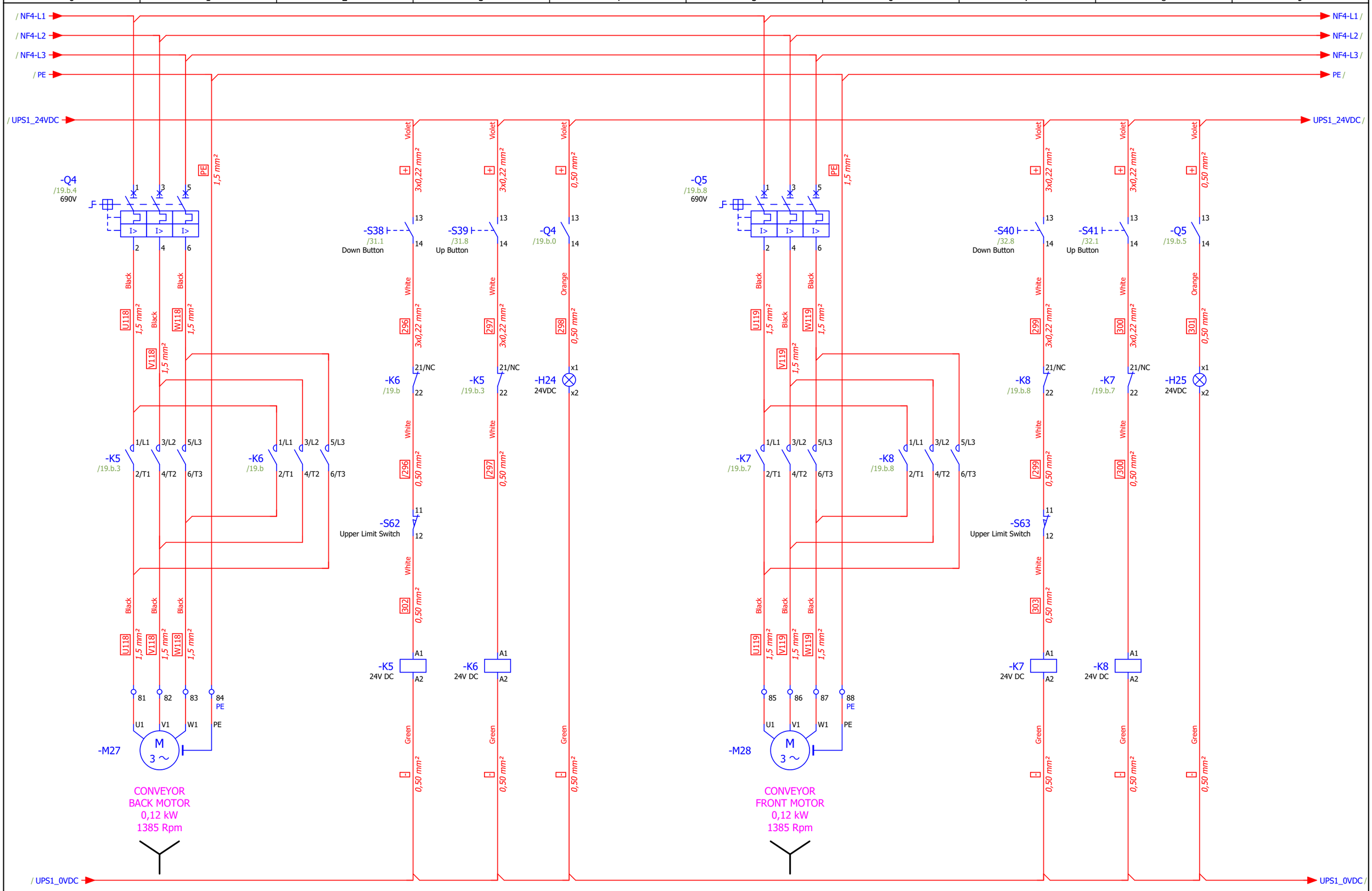

Project Version	v0.2	Author	Görkem Güray	GT FORM	**Güven Teknik Makina ve Kalıp Ind.Trade.Co.Ltd** Kavaklı Mah. Pamukova Sok. No:6 Silivri/İstanbul/Turkey +90 212 485 09 67 info@guventeknikmakina.com	**GTS1000**	CONVEYOR MOTORS
Last Update	13/11/2024	Revision	Berk Samat				Sayfa : 24 /62

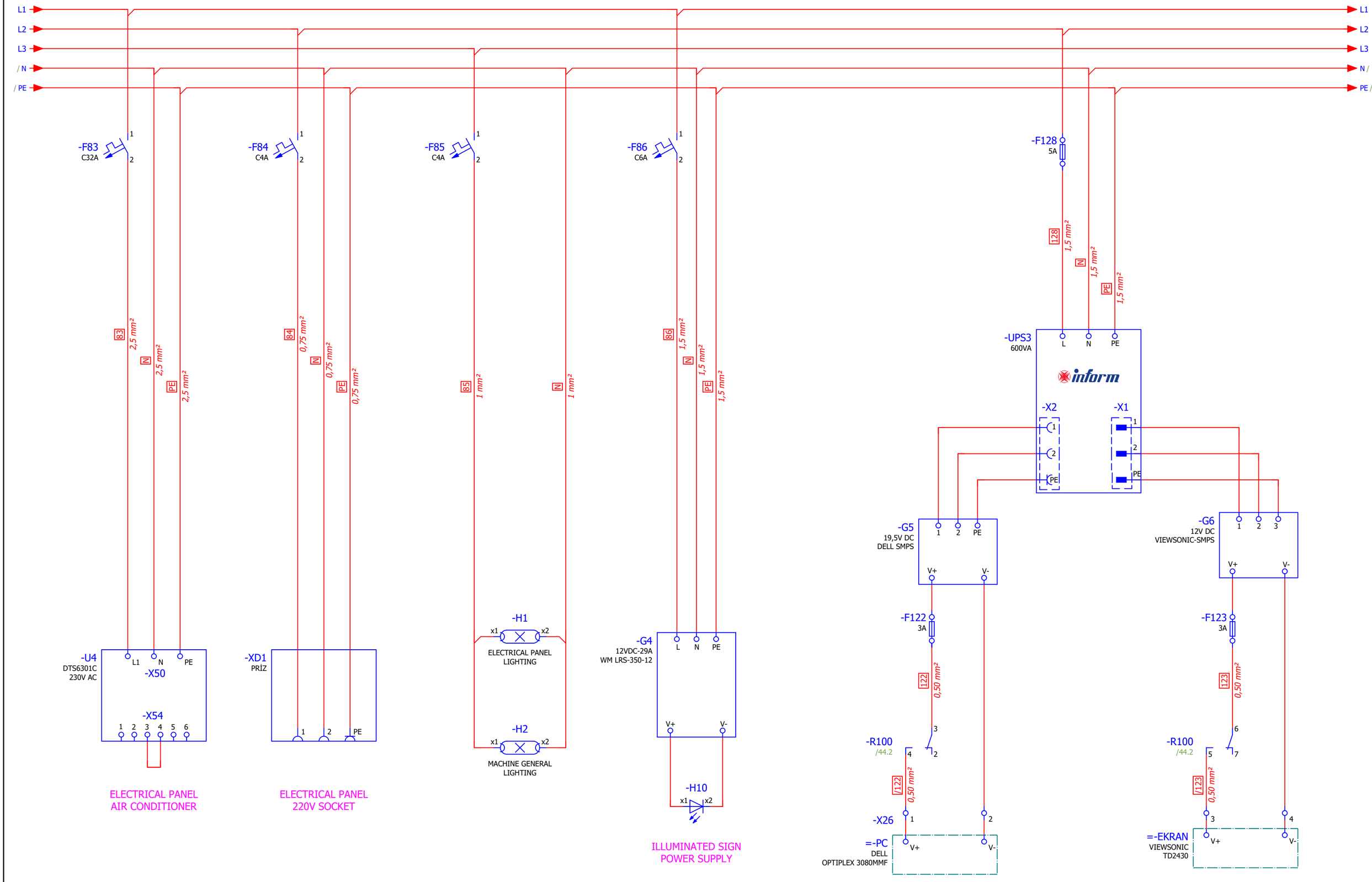

Project Version	v0.2	Author	Görkem Güray	GT FORM	**Güven Teknik Makina ve Kalıp Ind.Trade.Co.Ltd** Kavaklı Mah. Pamukova Sok. No:6 Silivri/İstanbul/Turkey +90 212 485 09 67 info@guventeknikmakina.com	**GTS1000**	AC DEVICES-1
Last Update	13/11/2024	Revision	Berk Samat				Sayfa : 25 /62

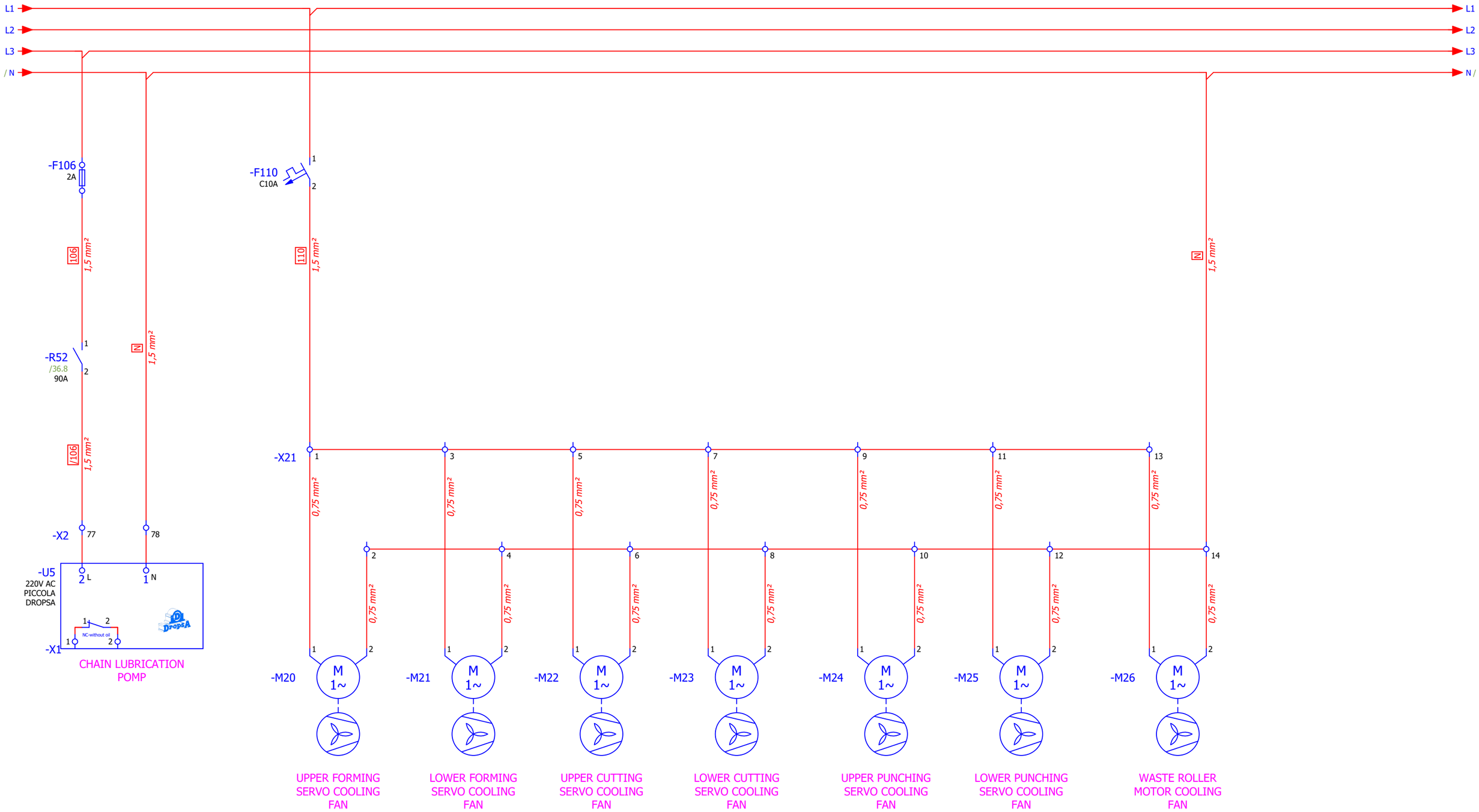

Project Version	v0.2	Author	Görkem Güray	GT FORM	**Güven Teknik Makina ve Kalıp Ind.Trade.Co.Ltd** Kavaklı Mah. Pamukova Sok. No:6 Silivri/İstanbul/Turkey +90 212 485 09 67 info@guventeknikmakina.com	**GTS1000**	AC DEVICES-2
Last Update	13/11/2024	Revision	Berk Samat				Sayfa : 26 /62

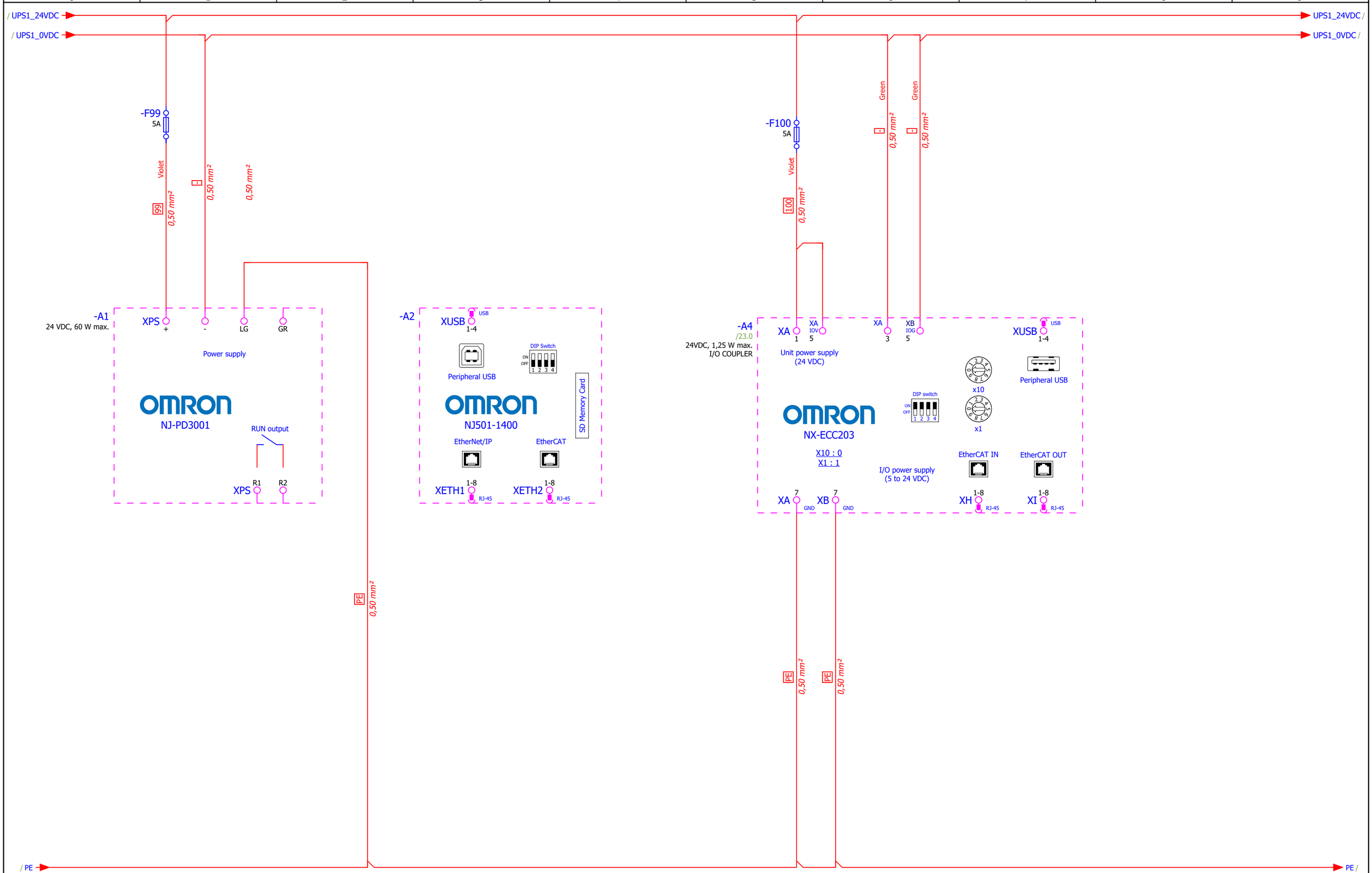

Project Version	v0.2	Author	Görkem Güray	GT FORM	**Güven Teknik Makina ve Kalıp Ind.Trade.Co.Ltd** Kavaklı Mah. Pamukova Sok. No:6 Silivri/İstanbul/Turkey +90 212 485 09 67 info@guventeknikmakina.com	**GTS1000**	DC DEVICES-1
Last Update	13/11/2024	Revision	Berk Samat				Sayfa : 27 /62

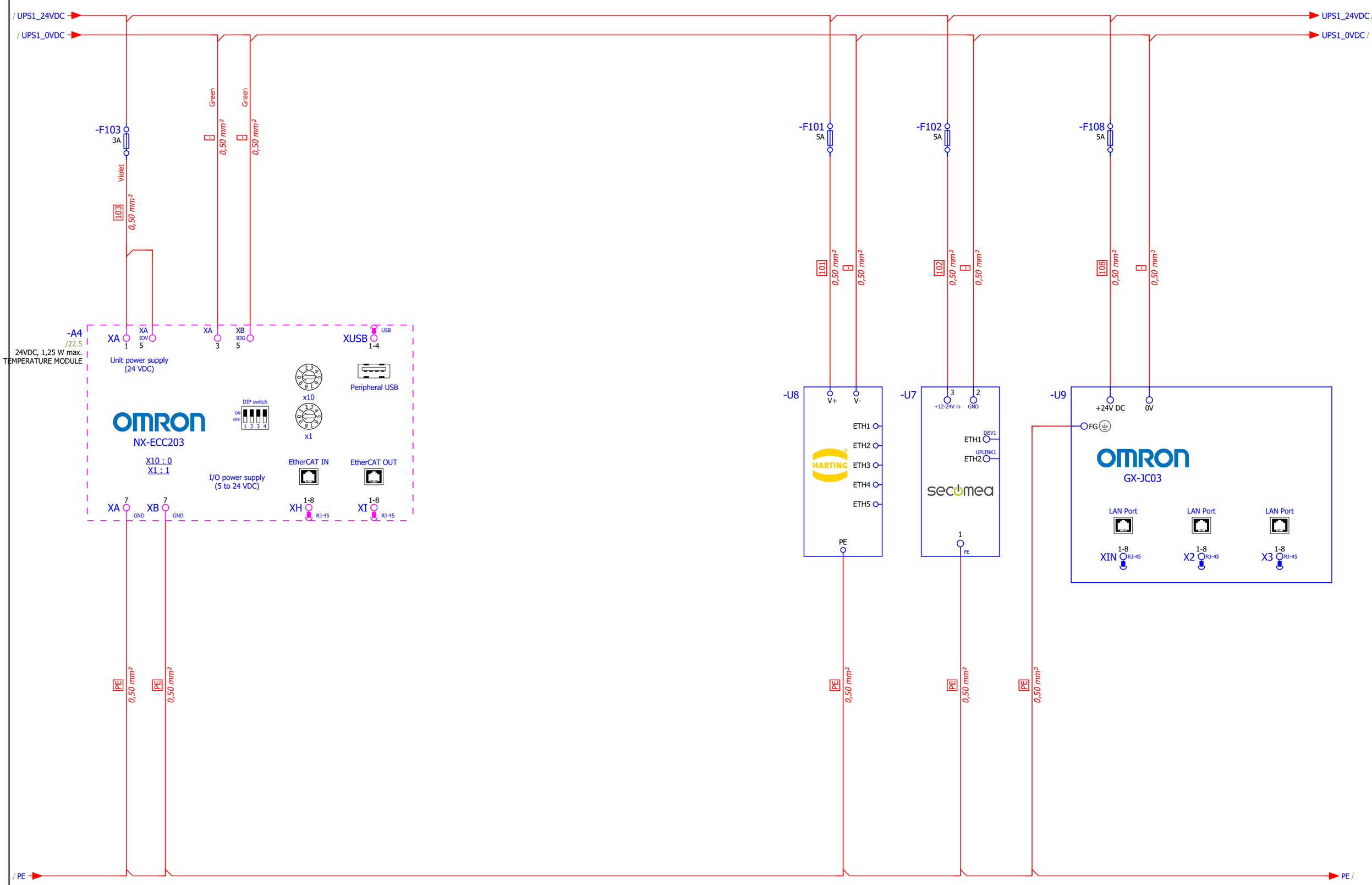

Project Version	v0.2	Author	Görkem Güray	GT FORM	**Güven Teknik Makina ve Kalıp Ind.Trade.Co.Ltd** Kavaklı Mah. Pamukova Sok. No:6 Silivri/İstanbul/Turkey +90 212 485 09 67 info@guventeknikmakina.com	**GTS1000**	DC DEVICES-2
Last Update	13/11/2024	Revision	Berk Samat				Sayfa : 28 /62

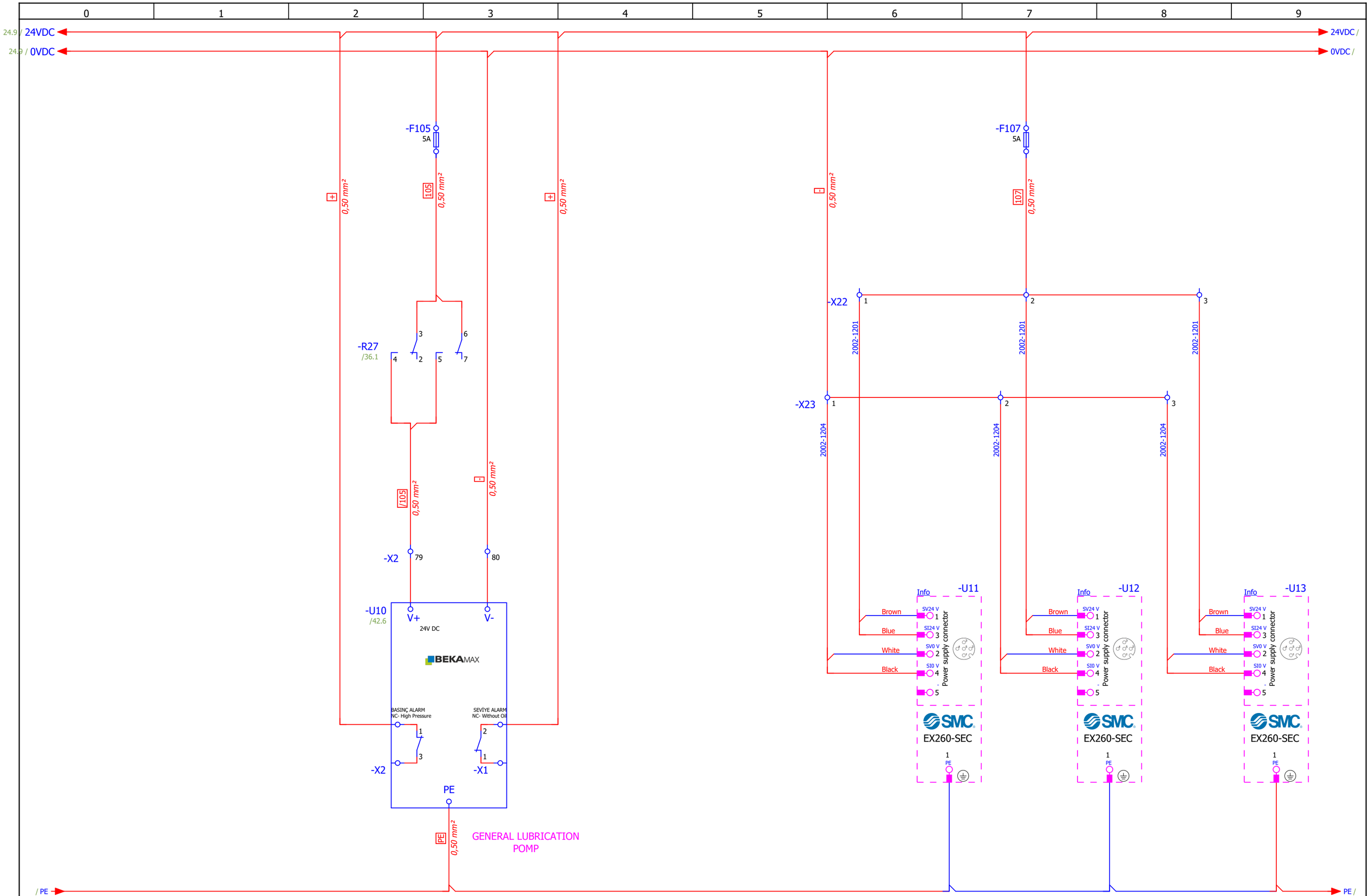

Project Version	v0.2	Author	Görkem Güray	GT FORM	**Güven Teknik Makina ve Kalıp Ind.Trade.Co.Ltd** Kavaklı Mah. Pamukova Sok. No:6 Silivri/İstanbul/Turkey +90 212 485 09 67 info@guventeknikmakina.com	**GTS1000**	DC DEVICES-3
Last Update	13/11/2024	Revision	Berk Samat				Sayfa : 29 /62

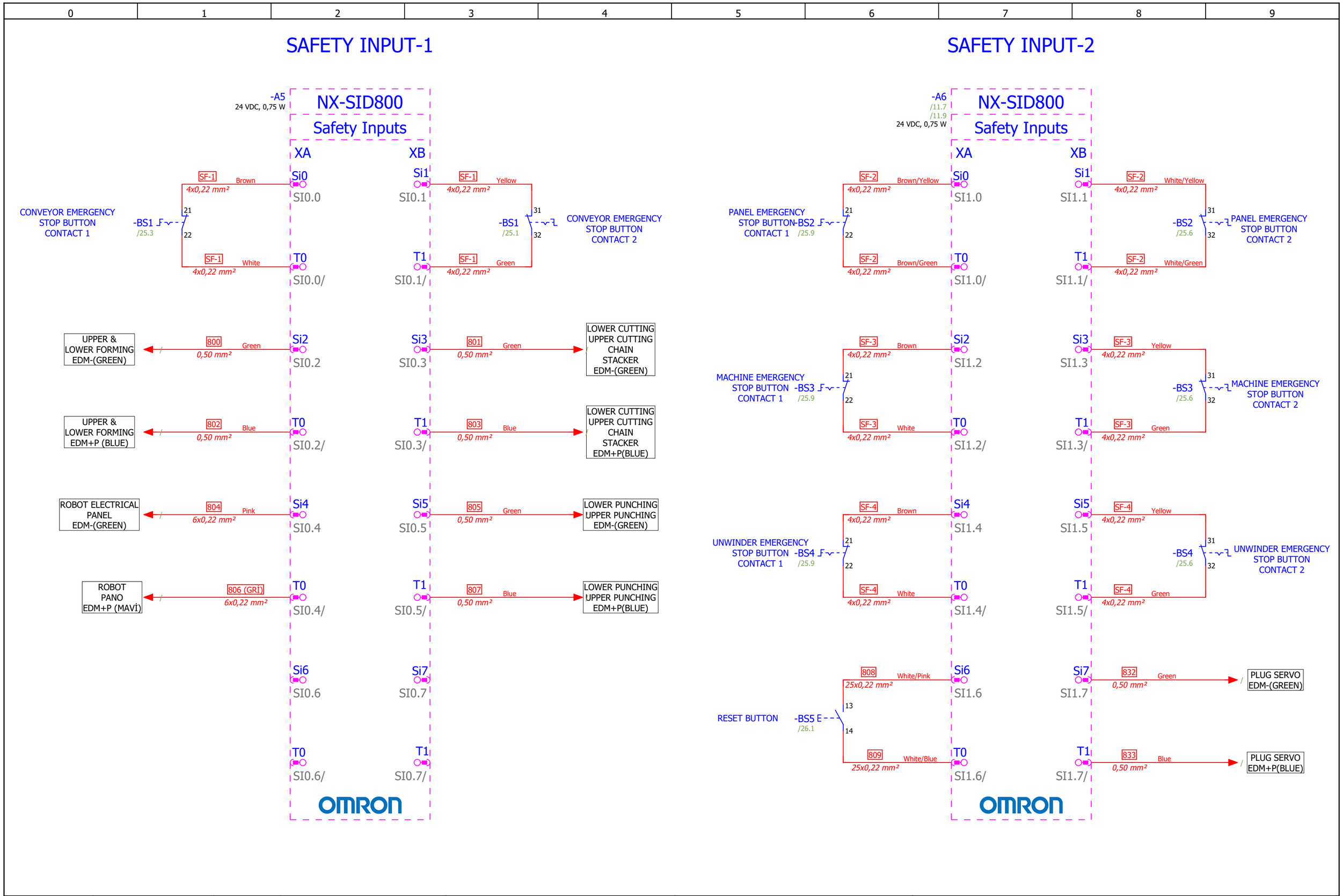

Project Version	v0.2	Author	Görkem Güray	GT FORM	**Güven Teknik Makina ve Kalıp Ind.Trade.Co.Ltd** Kavaklı Mah. Pamukova Sok. No:6 Silivri/İstanbul/Turkey +90 212 485 09 67 info@guventeknikmakina.com	**GTS1000**	SAFETY-1
Last Update	13/11/2024	Revision	Berk Samat				Sayfa : 30 /62

SAFETY OUTPUT-1

-A7
/10.0
/10.0
/10.0
/10.0
24 VDC, 0,75 W

NX-SOD400
Safety Outputs

XA XB

810 White/Gray 25x0,22 mm² — So0 SQ0.0 — So1 SQ0.1

RESET BUTTON LIGHT -BS5 /25.6 24V X1 X2

811 White/Black 25x0,22 mm² — IOG SQ0.0/ — IOG SQ0.1/

LOWER FORMING UPPER FORMING SF1+ (ORANGE) / 812 Orange 0,50 mm² — So2 SQ0.2

So3 SQ0.3 — 813 Black 0,50 mm² / LOWER FORMING UPPER FORMING SF2+ (BLACK)

LOWER FORMING UPPER FORMING SF1- (WHITE) / 814 White 0,50 mm² — IOG SQ0.2/

IOG SQ0.3/ — 815 Red 0,50 mm² / LOWER FORMING UPPER FORMING SF2- (RED)

OMRON

SAFETY INPUT-3

-A8
24 VDC, 0,75 W

NX-SID800
Safety Inputs

XA XB

DOOR-1 (NC Contact) -BS6: SF-5 Brown 4x0,22 mm² — 11 — 12 — SF-5 White 4x0,22 mm² — Si0 SI2.0 — T0 SI2.0/

Si1 SI2.1 — SF-5 Yellow 4x0,22 mm² — 13 — 14 — SF-5 Green 4x0,22 mm² — T1 SI2.1/ — -BS6 DOOR-1 (NO Contact)

DOOR-2 (NC Contact) -BS7: SF-6 Brown 4x0,22 mm² — 11 — 12 — SF-6 White 4x0,22 mm² — Si2 SI2.2 — T0 SI2.2/

Si3 SI2.3 — SF-6 Yellow 4x0,22 mm² — 13 — 14 — SF-6 Green 4x0,22 mm² — T1 SI2.3/ — -BS7 DOOR-2 (NO Contact)

DOOR-3 (NC Contact) -BS8: SF-7 Brown 4x0,22 mm² — 11 — 12 — SF-7 White 4x0,22 mm² — Si4 SI2.4 — T0 SI2.4/

Si5 SI2.5 — SF-7 Yellow 4x0,22 mm² — 13 — 14 — SF-7 Green 4x0,22 mm² — T1 SI2.5/ — -BS8 DOOR-3 (NO Contact)

DOOR-4 (NC Contact) -BS9: SF-8 Brown 4x0,22 mm² — 11 — 12 — SF-8 White 4x0,22 mm² — Si6 SI2.6 — T0 SI2.6/

Si7 SI2.7 — SF-8 (SARI) 4x0,22 mm² — 13 — 14 — SF-8 (YEŞİL) 4x0,22 mm² — T1 SI2.7/ — -BS9 DOOR-4 (NO Contact)

OMRON

Project Version	v0.2	Author	Görkem Güray	GT FORM	**Güven Teknik Makina ve Kalıp Ind.Trade.Co.Ltd** Kavaklı Mah. Pamukova Sok. No:6 Silivri/İstanbul/Turkey +90 212 485 09 67 info@guventeknikmakina.com	**GTS1000**	SAFETY-2
Last Update	13/11/2024	Revision	Berk Samat				Sayfa : 31 /62

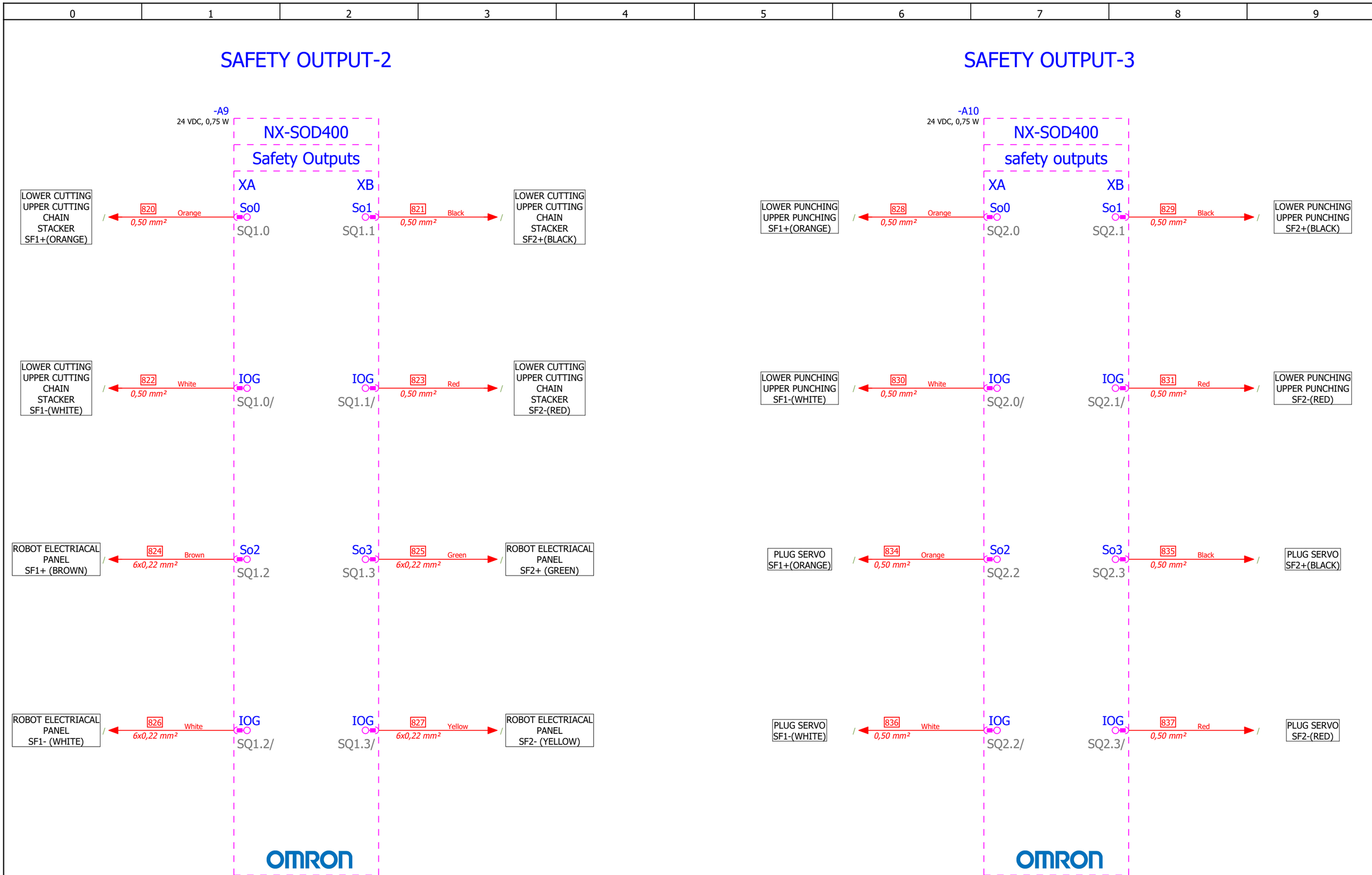

Project Version	v0.2	Author	Görkem Güray	GT FORM	**Güven Teknik Makina ve Kalıp Ind.Trade.Co.Ltd** Kavaklı Mah. Pamukova Sok. No:6 Silivri/İstanbul/Turkey +90 212 485 09 67 info@guventeknikmakina.com	**GTS1000**	SAFETY-3
Last Update	13/11/2024	Revision	Berk Samat				Sayfa : 32 /62

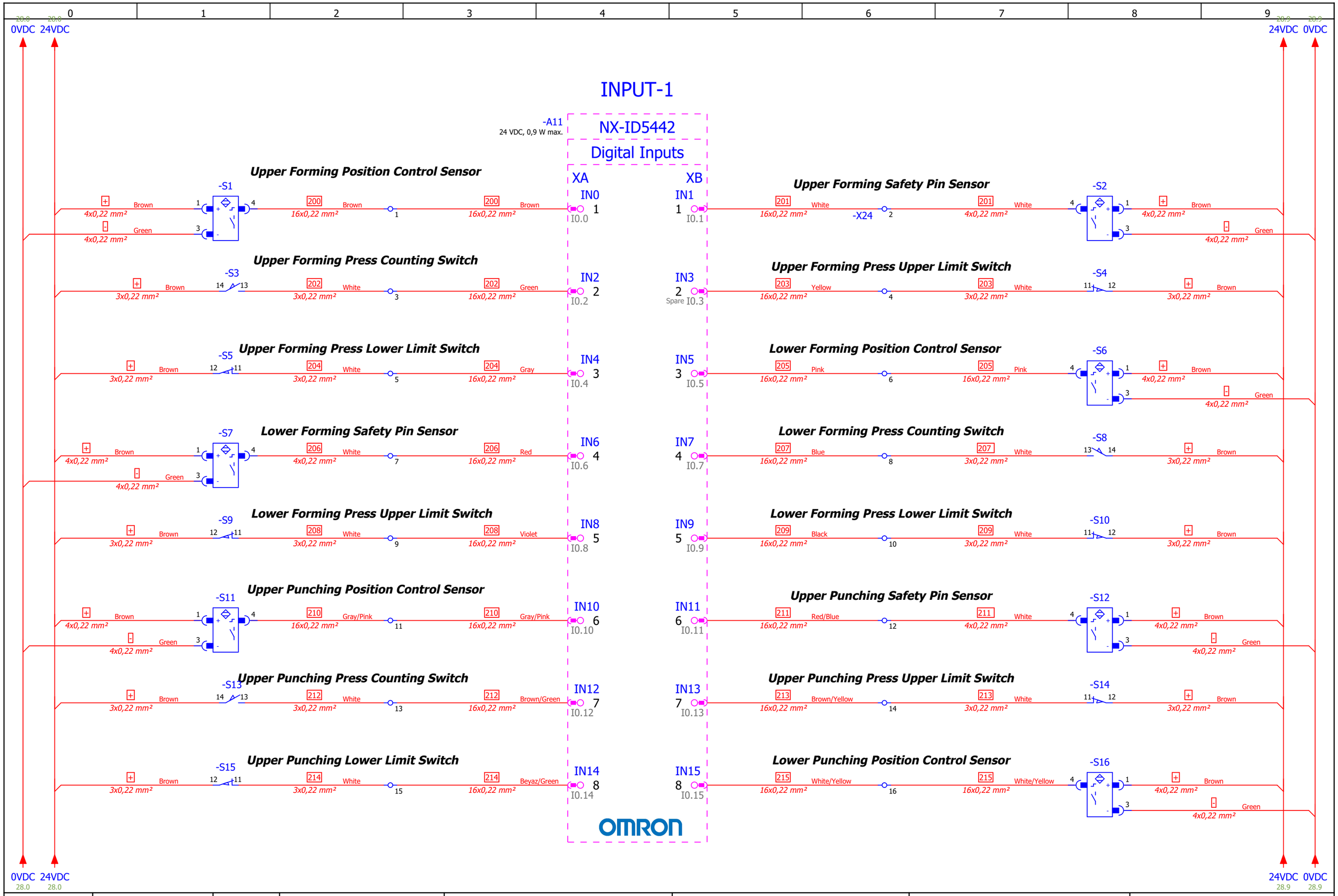

Project Version	v0.2	Author	Görkem Güray	GT FORM	**Güven Teknik Makina ve Kalıp Ind.Trade.Co.Ltd** Kavaklı Mah. Pamukova Sok. No:6 Silivri/İstanbul/Turkey +90 212 485 09 67 info@guventeknikmakina.com	**GTS1000**	INPUTS-1
Last Update	13/11/2024	Revision	Berk Samat				Sayfa : 33 /62

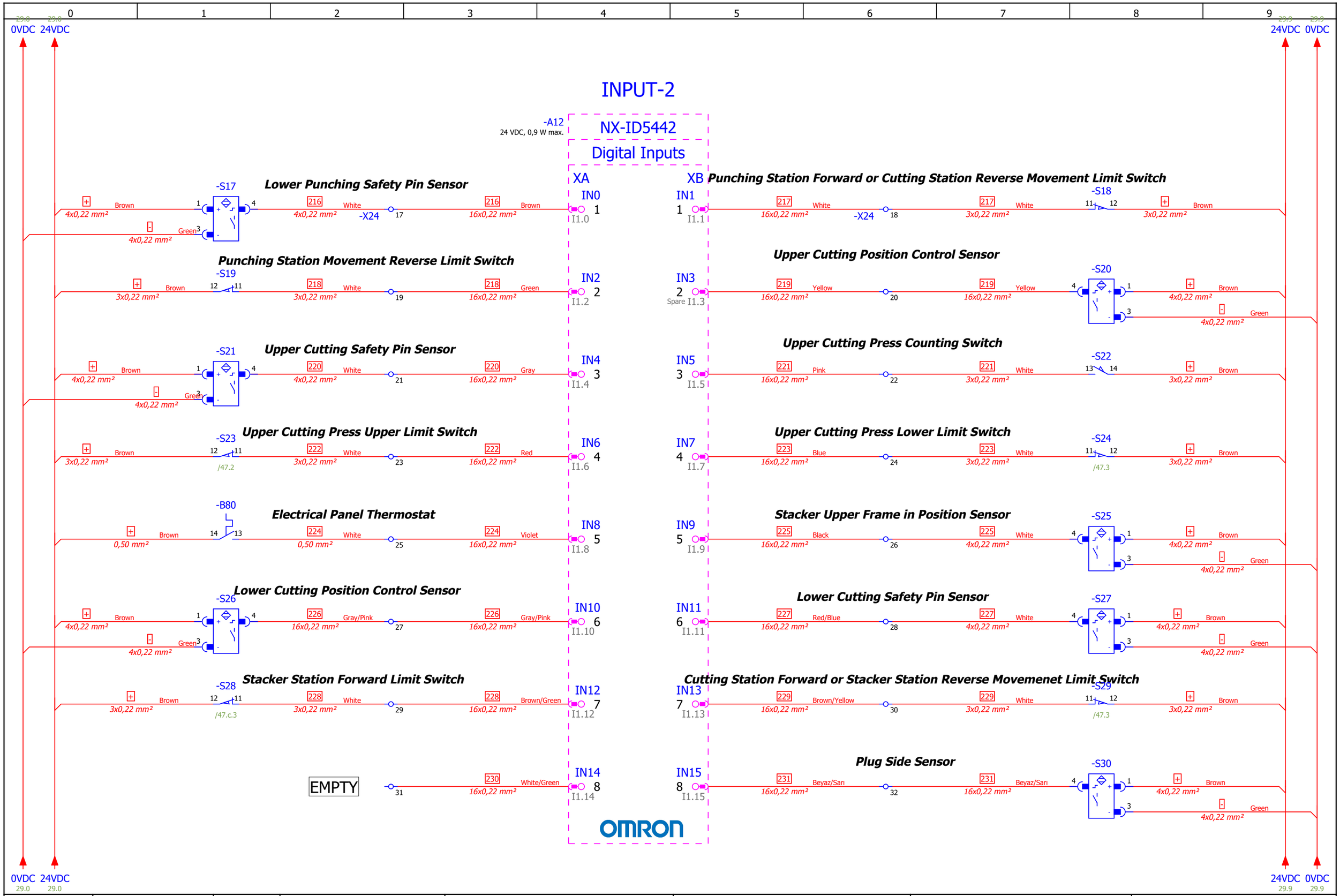

Project Version	v0.2	Author	Görkem Güray	GT FORM	**Güven Teknik Makina ve Kalıp Ind.Trade.Co.Ltd** Kavaklı Mah. Pamukova Sok. No:6 Silivri/İstanbul/Turkey +90 212 485 09 67 info@guventeknikmakina.com	**GTS1000**	INPUTS-2
Last Update	13/11/2024	Revision	Berk Samat				Sayfa : 34 /62

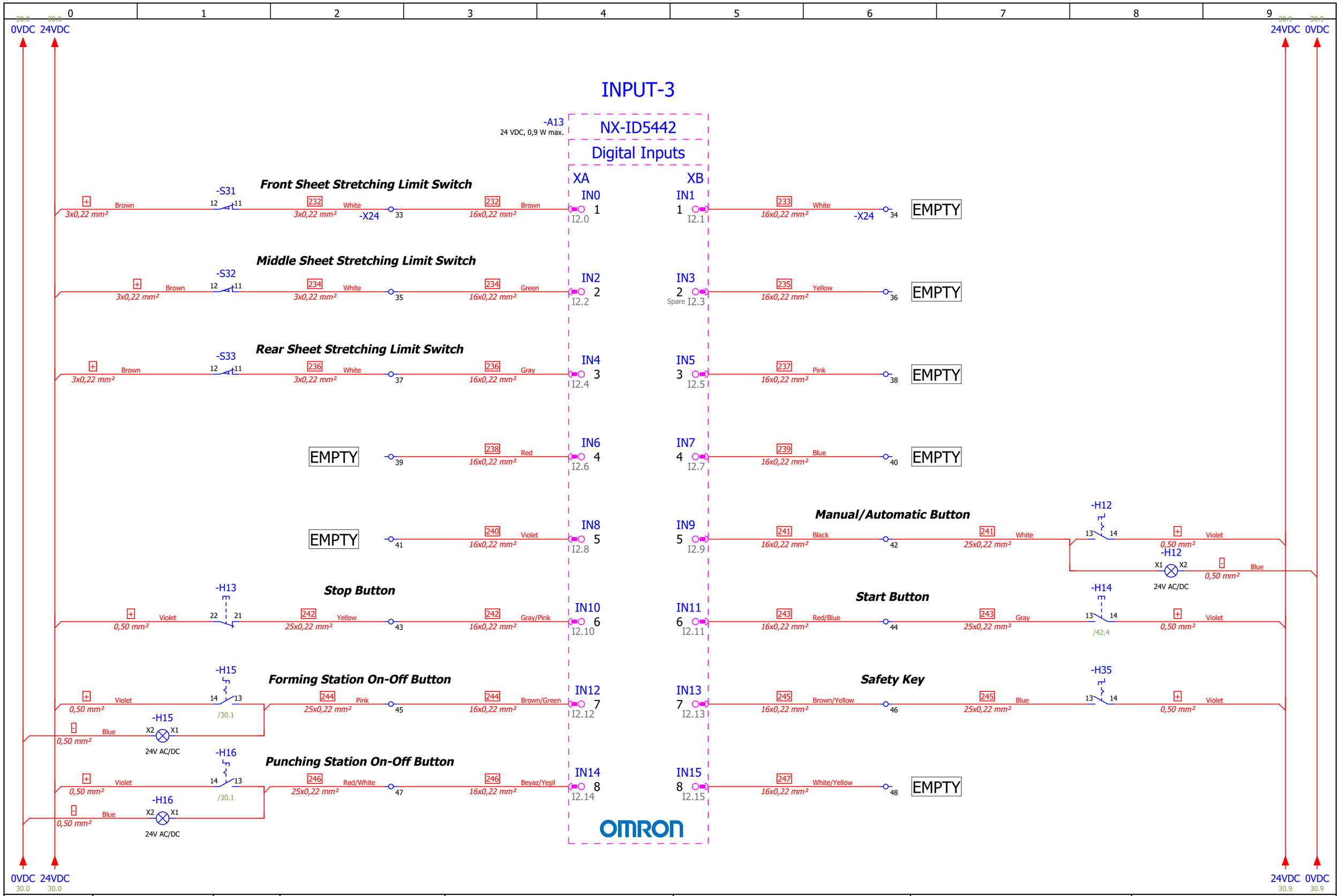

Project Version	v0.2	Author	Görkem Güray	GT FORM	**Güven Teknik Makina ve Kalıp Ind.Trade.Co.Ltd** Kavaklı Mah. Pamukova Sok. No:6 Silivri/İstanbul/Turkey +90 212 485 09 67 info@guventeknikmakina.com	**GTS1000**	INPUTS-3
Last Update	13/11/2024	Revision	Berk Samat				Sayfa : 35 /62

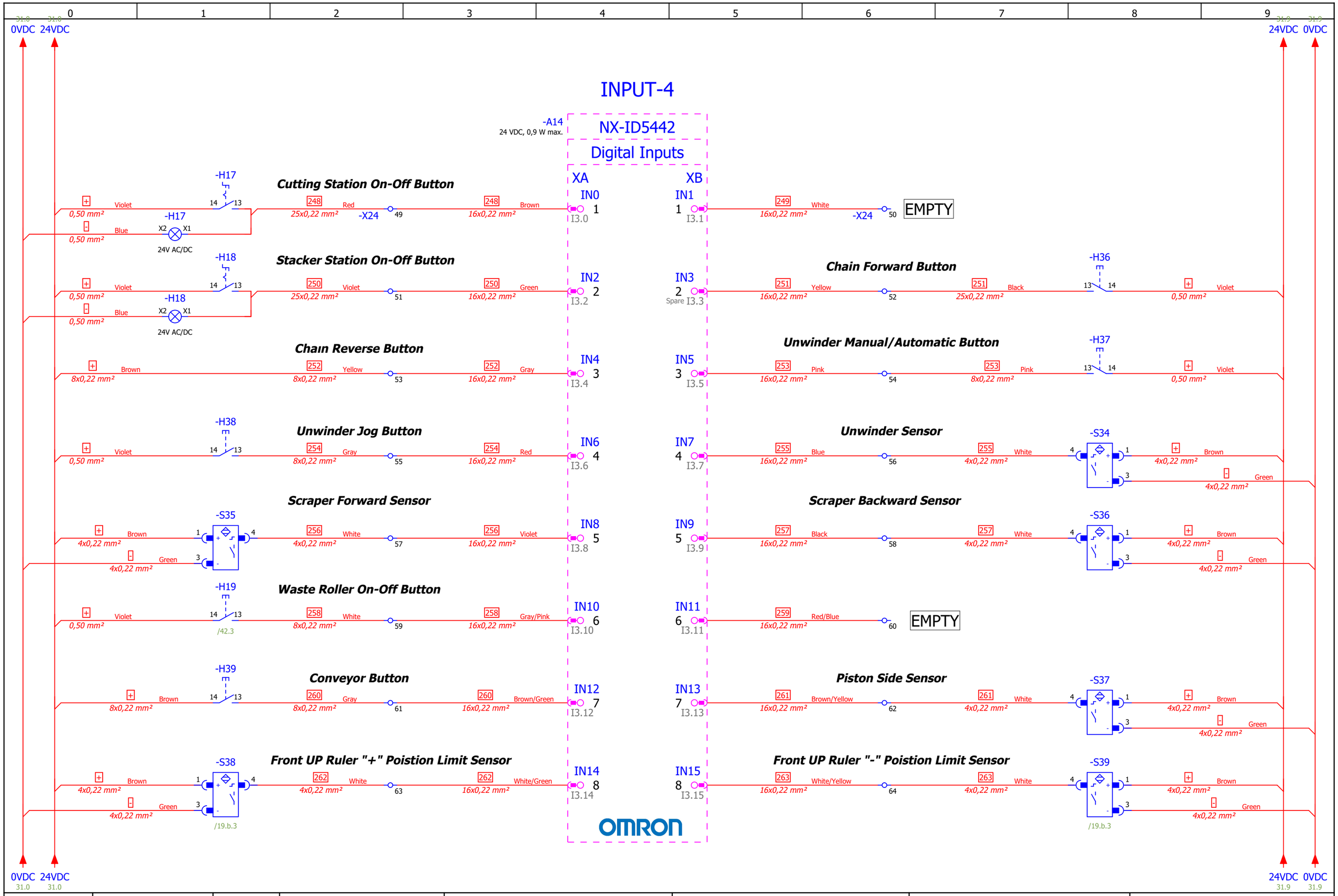

Project Version	v0.2	Author	Görkem Güray	GT FORM	**Güven Teknik Makina ve Kalıp Ind.Trade.Co.Ltd** Kavaklı Mah. Pamukova Sok. No:6 Silivri/İstanbul/Turkey +90 212 485 09 67 info@guventeknikmakina.com	**GTS1000**	INPUTS-4
Last Update	13/11/2024	Revision	Berk Samat				Sayfa : 36 /62

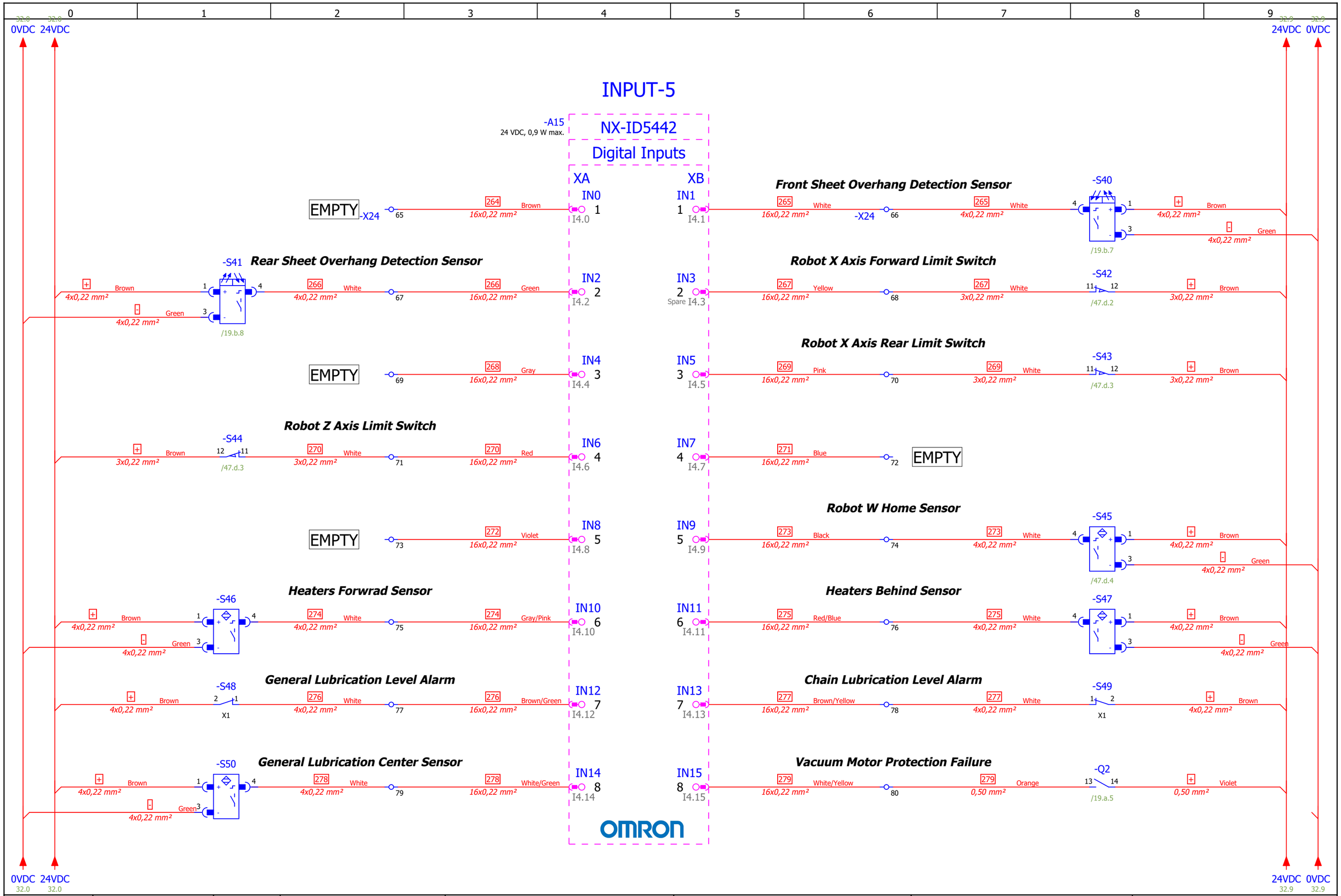

Project Version	v0.2	Author	Görkem Güray	GT FORM	**Güven Teknik Makina ve Kalıp Ind.Trade.Co.Ltd** Kavaklı Mah. Pamukova Sok. No:6 Silivri/İstanbul/Turkey +90 212 485 09 67 info@guventeknikmakina.com	**GTS1000**	INPUTS-5
Last Update	13/11/2024	Revision	Berk Samat				Sayfa : 37 /62

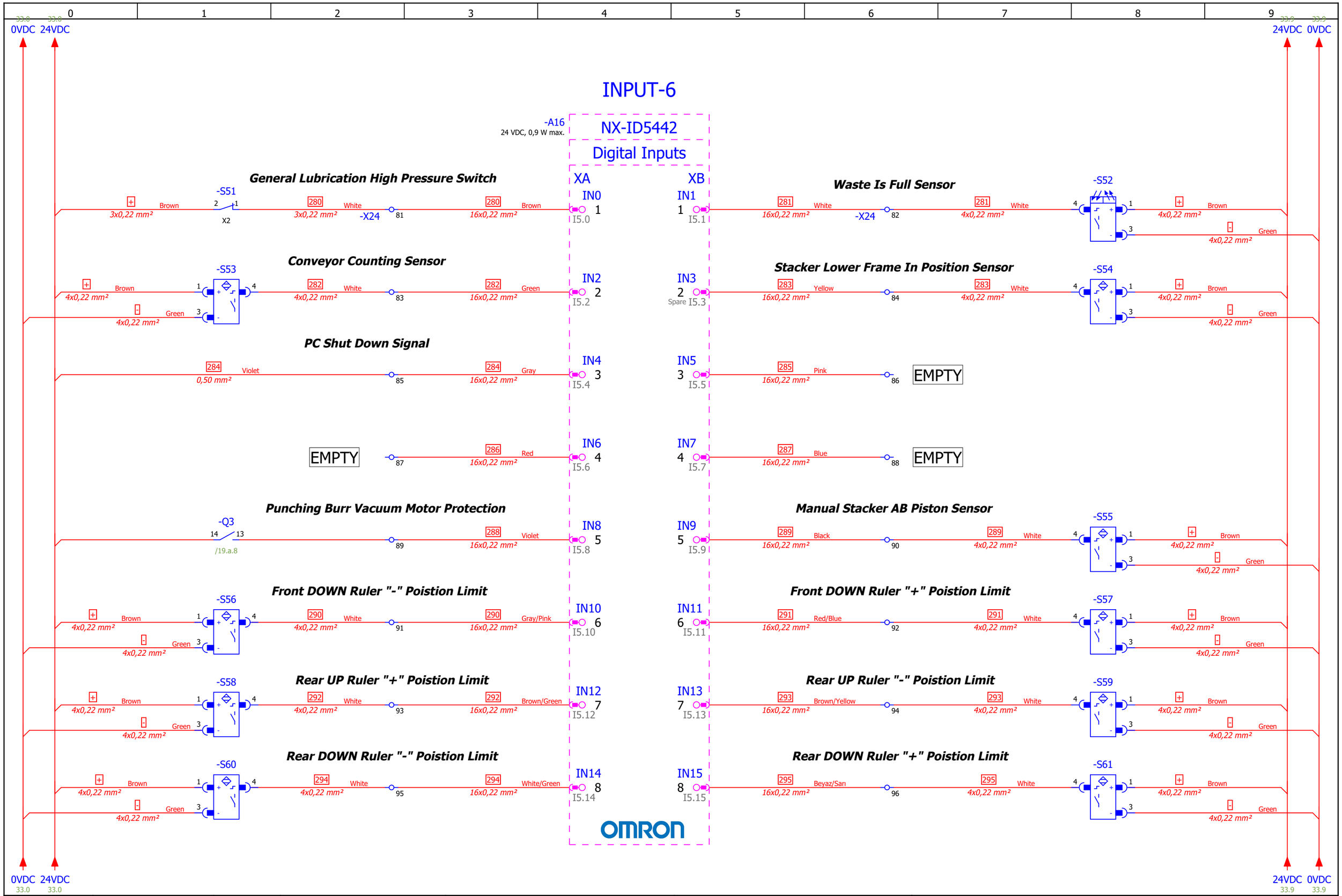

Project Version	v0.2	Author	Görkem Güray	GT FORM	**Güven Teknik Makina ve Kalıp Ind.Trade.Co.Ltd** Kavaklı Mah. Pamukova Sok. No:6 Silivri/İstanbul/Turkey +90 212 485 09 67 info@guventeknikmakina.com	**GTS1000**	INPUTS-6
Last Update	13/11/2024	Revision	Berk Samat				Sayfa : 38 /62

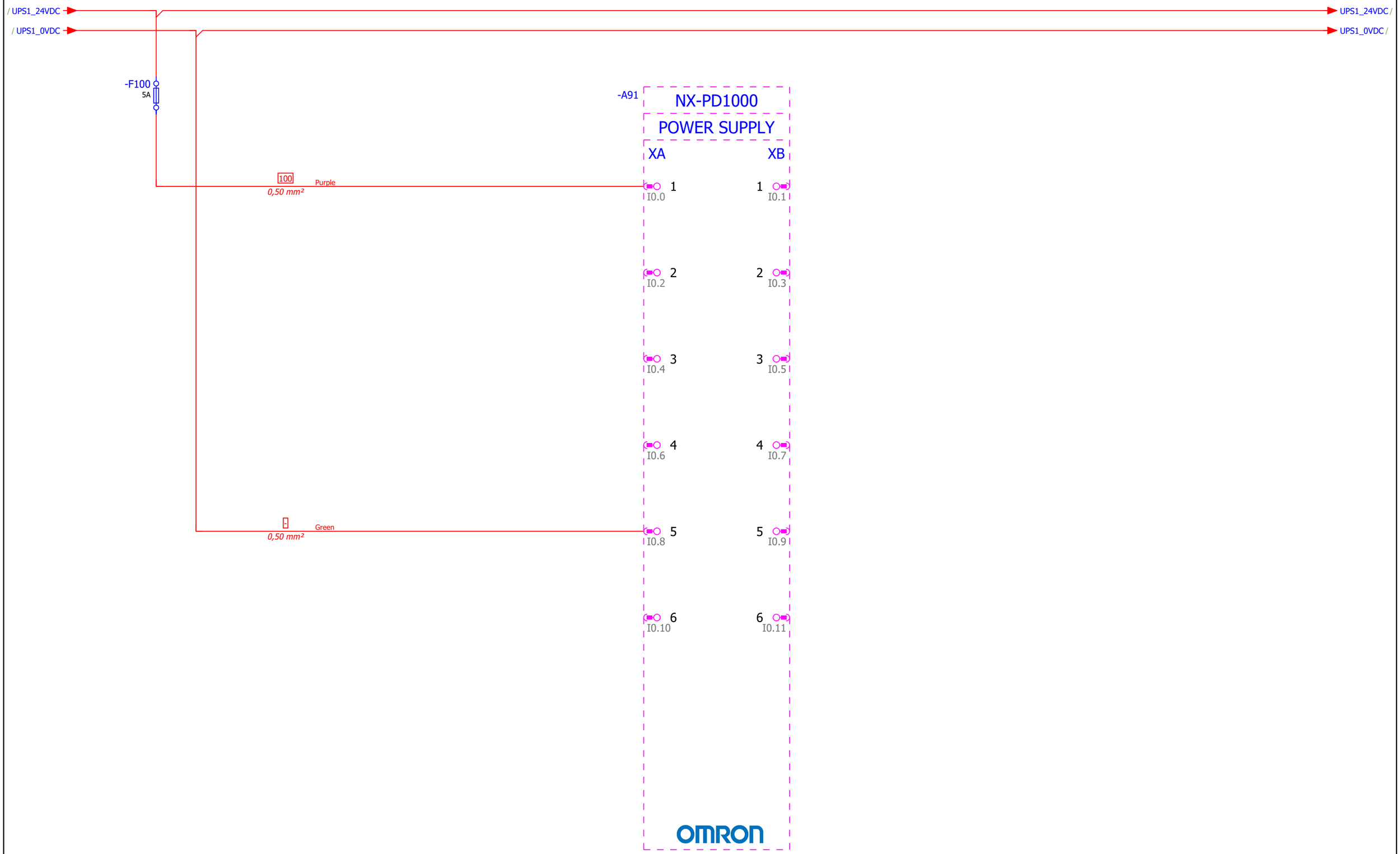

Project Version	v0.2	Author	Görkem Güray	GT FORM	**Güven Teknik Makina ve Kalıp Ind.Trade.Co.Ltd** Kavaklı Mah. Pamukova Sok. No:6 Silivri/İstanbul/Turkey +90 212 485 09 67 info@guventeknikmakina.com	**GTS1000**	PD1000
Last Update	13/11/2024	Revision	Berk Samat				Sayfa : 39 /62

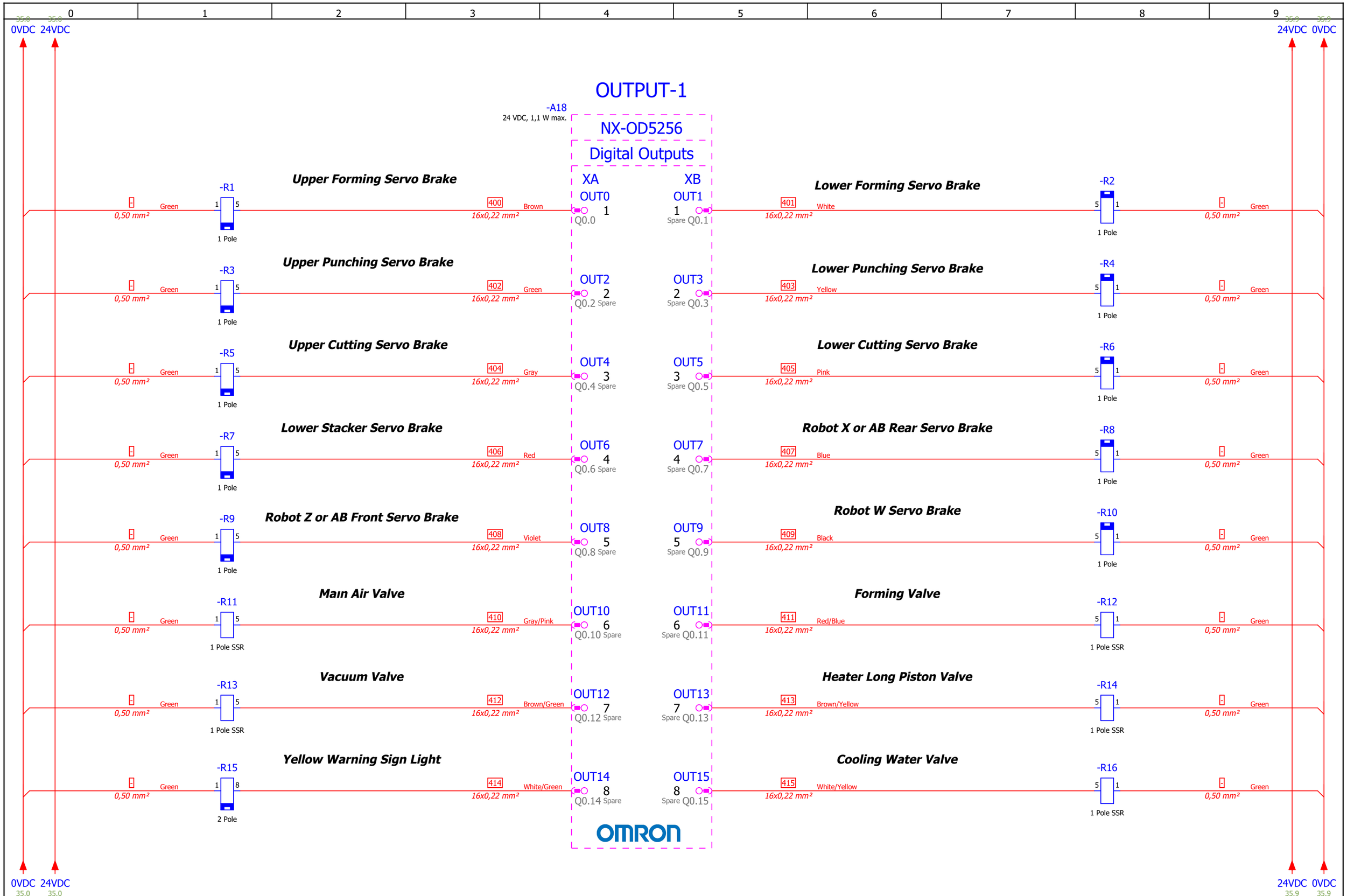

Project Version	v0.2	Author	Görkem Güray	GT FORM	**Güven Teknik Makina ve Kalıp Ind.Trade.Co.Ltd** Kavaklı Mah. Pamukova Sok. No:6 Silivri/İstanbul/Turkey +90 212 485 09 67 info@guventeknikmakina.com	**GTS1000**	OUTPUTS-1
Last Update	13/11/2024	Revision	Berk Samat				Sayfa : 40 /62

0 1 2 3 4 5 6 7 8 9

36.8 0VDC 36.8 24VDC 36.9 24VDC 36.9 0VDC

OUTPUT-2

-A19
24 VDC, 1,1 W max.

NX-OD5256
Digital Outputs

XA XB

OUT0 1 Q1.0 — OUT1 1 Spare Q1.1
OUT2 2 Q1.2 Spare — OUT3 2 Spare Q1.3
OUT4 3 Q1.4 Spare — OUT5 3 Spare Q1.5
OUT6 4 Q1.6 Spare — OUT7 4 Spare Q1.7
OUT8 5 Q1.8 Spare — OUT9 5 Spare Q1.9
OUT10 6 Q1.10 Spare — OUT11 6 Spare Q1.11
OUT12 7 Q1.12 Spare — OUT13 7 Spare Q1.13
OUT14 8 Q1.14 Spare — OUT15 8 Spare Q1.15

OMRON

Upper Forming Clamp Frame Valve-1
-R17 — 1 Pole SSR
Green 0,50 mm² — 416 Brown 16x0,22 mm²

Lower Forming Clamp Frame
-R18 — 1 Pole SSR
417 White 16x0,22 mm² — Green 0,50 mm²

Manual Sweeper Valve
-R19 — 1 Pole SSR
Green 0,50 mm² — 418 Green 16x0,22 mm²

Forming Blowing Valve
-R20 — 1 Pole SSR
419 Yellow 16x0,22 mm² — Green 0,50 mm²

Robot Blowing "A" Valve
-R21 — 1 Pole SSR
Green 0,50 mm² — 420 Gray 16x0,22 mm²

Robot Blowing "B" Valve
-R22 — 1 Pole SSR
421 Pink 16x0,22 mm² — Green 0,50 mm²

Waste Roller Start Relay
-R23 — 2 Pole
Green 0,50 mm² — 422 Red 16x0,22 mm²

Lights of Start, Stop And Green Sign
-R24 — 2 Pole
423 Blue 16x0,22 mm² — Green 0,50 mm²

Alarm Red Sign Light
-R25 — 2 Pole
Green 0,50 mm² — 424 Violet 16x0,22 mm²

Vacuum Motor Start Relay
-R26 — 2 Pole
425 Black 16x0,22 mm² — Green 0,50 mm²

General Lubrication Start Relay
-R27 — 2 Pole
Green 0,50 mm² — 426 Gray/Pink 16x0,22 mm²

Chain Lubrication Start Relay
-R52 — 2 Pole
427 Red/Blue 16x0,22 mm² — Green 0,50 mm²

Stacker Vacuum Valve
-R28 — 1 Pole SSR
Green 0,50 mm² — 428 Brown/Green 16x0,22 mm²

Punching Station Lubrication On/Off Valve
-R29 — 1 Pole SSR
429 Brown/Yellow 16x0,22 mm² — Green 0,50 mm²

Robot Blowing "C" Valve
-R30 — 1 Pole SSR
Green 0,50 mm² — 430 White/Green 16x0,22 mm²

Robot Blowing "D" Valve
-R31 — 1 Pole SSR
431 White/Yellow 16x0,22 mm² — Green 0,50 mm²

0VDC 36.0 24VDC 36.0 — 24VDC 36.9 0VDC 36.9

Project Version	v0.2	Author	Görkem Güray	GT FORM	**Güven Teknik Makina ve Kalıp Ind.Trade.Co.Ltd** Kavaklı Mah. Pamukova Sok. No:6 Silivri/İstanbul/Turkey +90 212 485 09 67 info@guventeknikmakina.com	**GTS1000**	OUTPUTS-2
Last Update	13/11/2024	Revision	Berk Samat				Sayfa : 41 /62

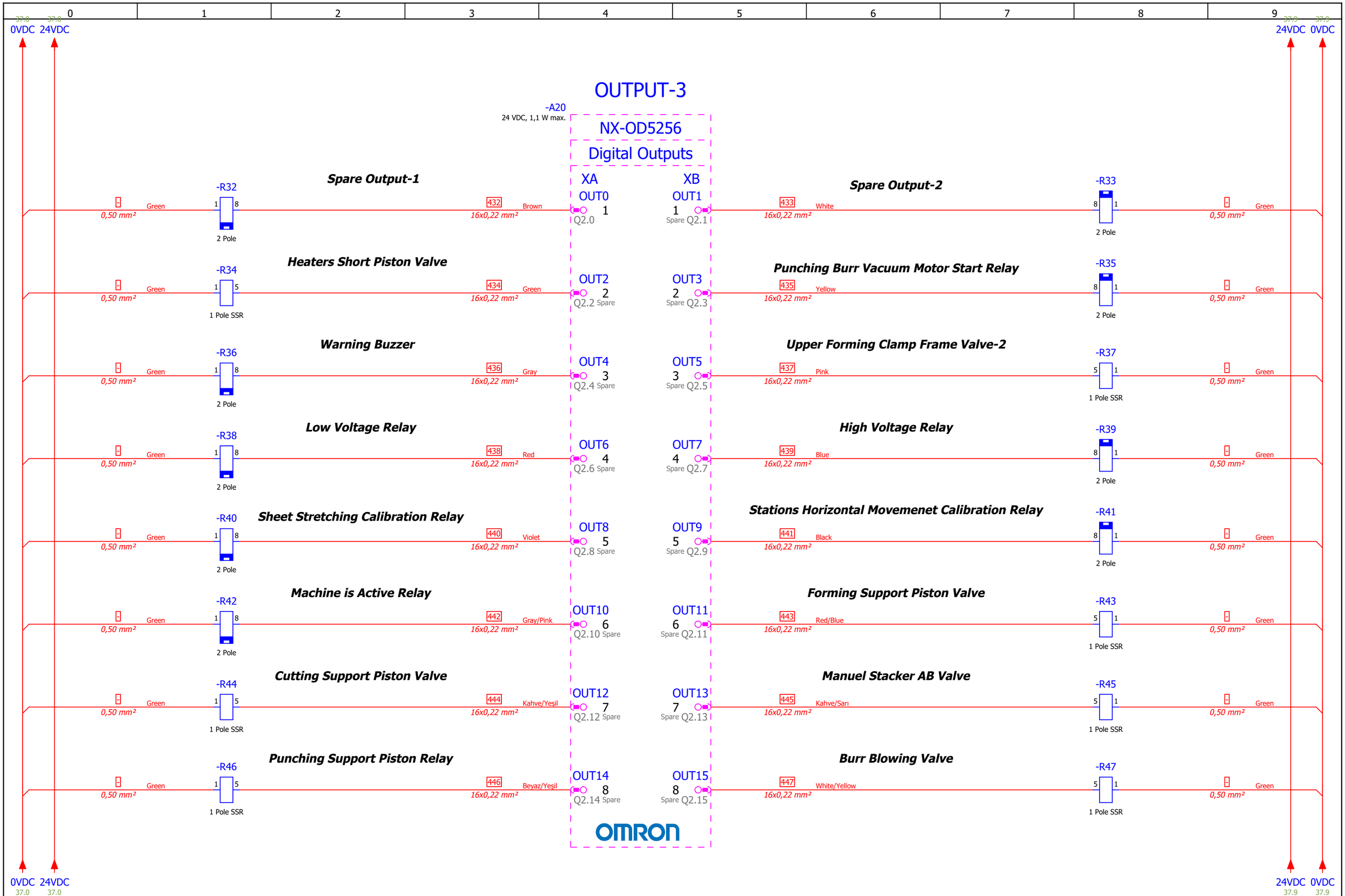

Project Version	v0.2	Author	Görkem Güray	GT FORM	**Güven Teknik Makina ve Kalıp Ind.Trade.Co.Ltd** Kavaklı Mah. Pamukova Sok. No:6 Silivri/İstanbul/Turkey +90 212 485 09 67 info@guventeknikmakina.com	**GTS1000**	OUTPUTS-3
Last Update	13/11/2024	Revision	Berk Samat				Sayfa : 42 /62

OUTPUT-4 (G9SP)

-A26
24 VDC, 1,1 W max.

NX-OD5256

Digital Outputs

XA		XB	
OUT0		OUT1	
1	Q2.0	1	Spare Q2.1
OUT2		OUT3	
2	Q2.2 Spare	2	Spare Q2.3
OUT4		OUT5	
3	Q2.4 Spare	3	Spare Q2.5
OUT6		OUT7	
4	Q2.6 Spare	4	Spare Q2.7
OUT8		OUT9	
5	Q2.8 Spare	5	Spare Q2.9
OUT10		OUT11	
6	Q2.10 Spare	6	Spare Q2.11
OUT12		OUT13	
7	Q2.12 Spare	7	Spare Q2.13
OUT14		OUT15	
8	Q2.14 Spare	8	Spare Q2.15

OMRON

38.0 0VDC
38.0 24VDC
38.9 24VDC
38.9 0VDC

-R48 — 1 Pole SSR
PISTON MODE ON — 756 — Yellow — 0,50 mm²
PLUG MODE ON — 757 — Yellow — 0,50 mm²
-R49 — 1 Pole SSR
Green — 0,50 mm²

FORMING LOADCELL RESET — 759 — Pink — 0,50 mm²
-R50 — 1 Pole
Green — 0,50 mm²

-R51 — 1 Pole
CUTTING LOADCELL RESET — 760 — Pink — 0,50 mm²
Green — 0,50 mm²

-R53 — 2 Pole
PLUG SERVO MOTOR BRAKE — 762 — Pink — 0,50 mm²
Green — 0,50 mm²

0VDC 24VDC
24VDC 0VDC

Project Version	v0.2	Author	Görkem Güray	GT FORM	**Güven Teknik Makina ve Kalıp Ind.Trade.Co.Ltd** Kavaklı Mah. Pamukova Sok. No:6 Silivri/İstanbul/Turkey +90 212 485 09 67 info@guventeknikmakina.com	**GTS1000**	OUTPUTS-4
Last Update	13/11/2024	Revision	Berk Samat				Sayfa : 43 /62

ANALOG INPUT-1

39.0 0VDC 39.0 24VDC 39.0 10VDC

-A22 NX-AD3604

Analog Inputs

XA XB

Input1+ 1 PIW0 — Input2+ 1 PIW4

Input1- 2 — Input2- 2

AG 5 — AG 5

AG 6 — AG 6

OMRON

Upper Cutting Front Ruler

Green 3x0,22 mm² — -R101 (x1, x2, x3) — Brown 3x0,22 mm²

840 White 3x0,22 mm² → Input1+

0,50 mm² → Input1-

Upper Cutting Rear Ruler

841 White 3x0,22 mm² → Input2+

Green 3x0,22 mm² — -R102 (x1, x2, x3) — Brown 3x0,22 mm²

0,50 mm² Green → Input2-

Lower Cutting Front Ruler

Green 3x0,22 mm² — -R103 (x1, x2, x3) — Brown 3x0,22 mm²

842 White 3x0,22 mm² → Input3+

0,50 mm² Green → Input3-

Lower Cutting Rear Ruler

843 White 3x0,22 mm² → Input4+

Green 3x0,22 mm² — -R104 (x1, x2, x3) — Brown 3x0,22 mm²

0,50 mm² Green → Input4-

39.9 10VDC 39.9 24VDC 39.9 0VDC

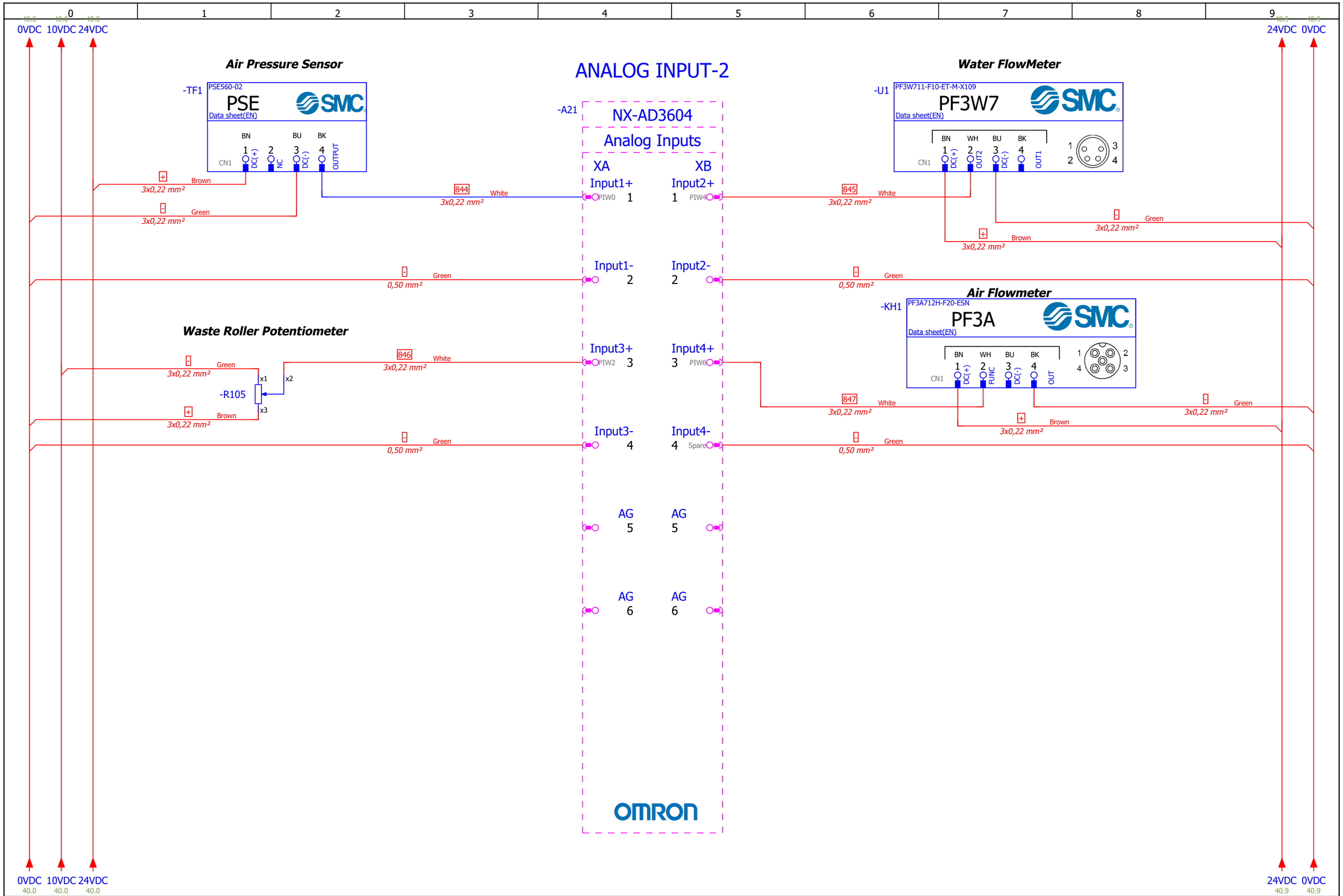

Project Version	v0.2	Author	Görkem Güray	GT FORM	**Güven Teknik Makina ve Kalıp Ind.Trade.Co.Ltd** Kavaklı Mah. Pamukova Sok. No:6 Silivri/İstanbul/Turkey +90 212 485 09 67 info@guventeknikmakina.com	**GTS1000**	ANALOG-2
Last Update	13/11/2024	Revision	Berk Samat				Sayfa : 45 /62

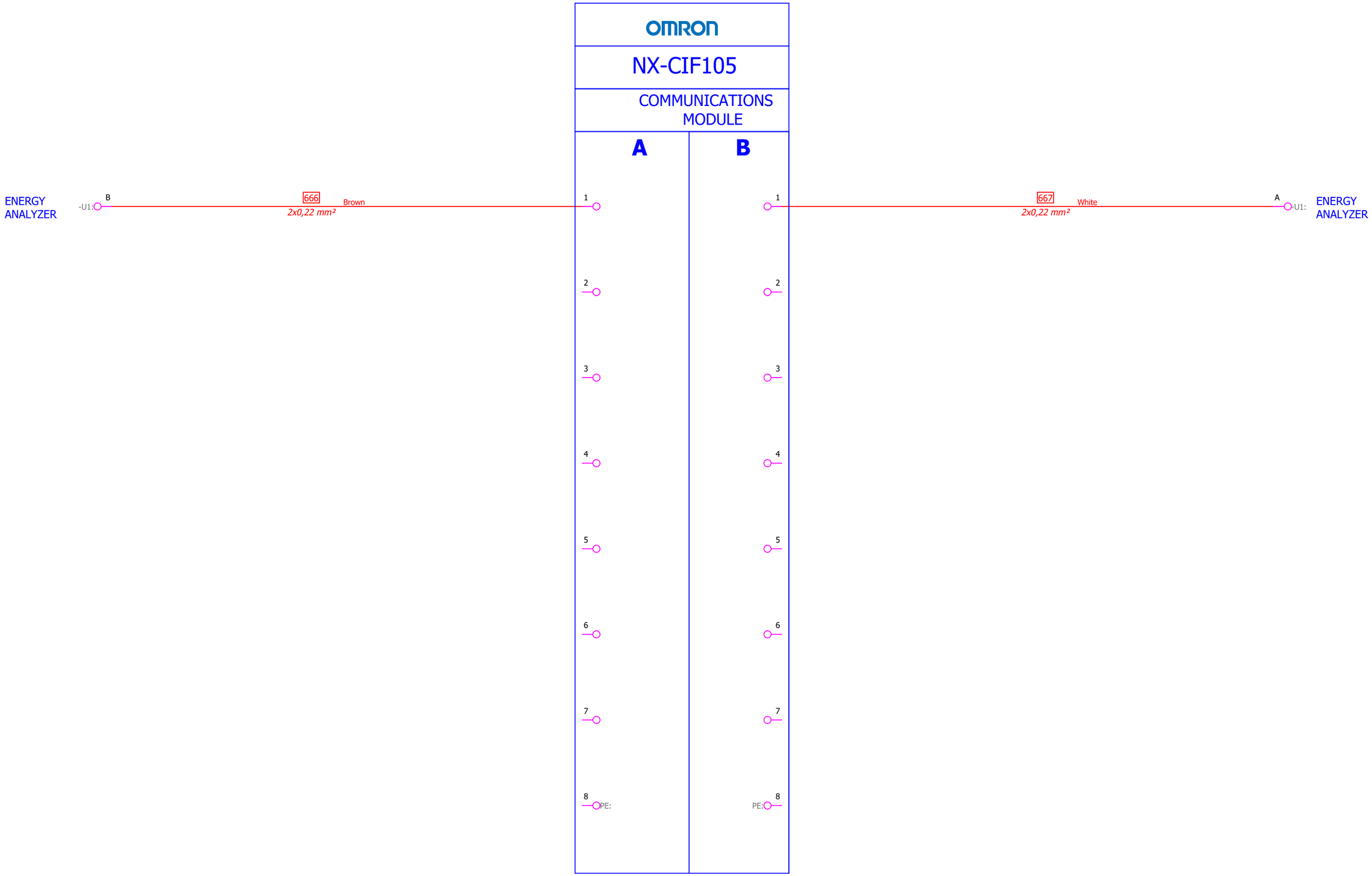
OMRON
NX-CIF105
COMMUNICATIONS MODULE
A
B
ENERGY ANALYZER
-U1:
B
666
Brown
2x0,22 mm²
1
2
3
4
5
6
7
8
PE:
1
2
3
4
5
6
7
8
PE:
667
White
2x0,22 mm²
A
-U1:
ENERGY ANALYZER

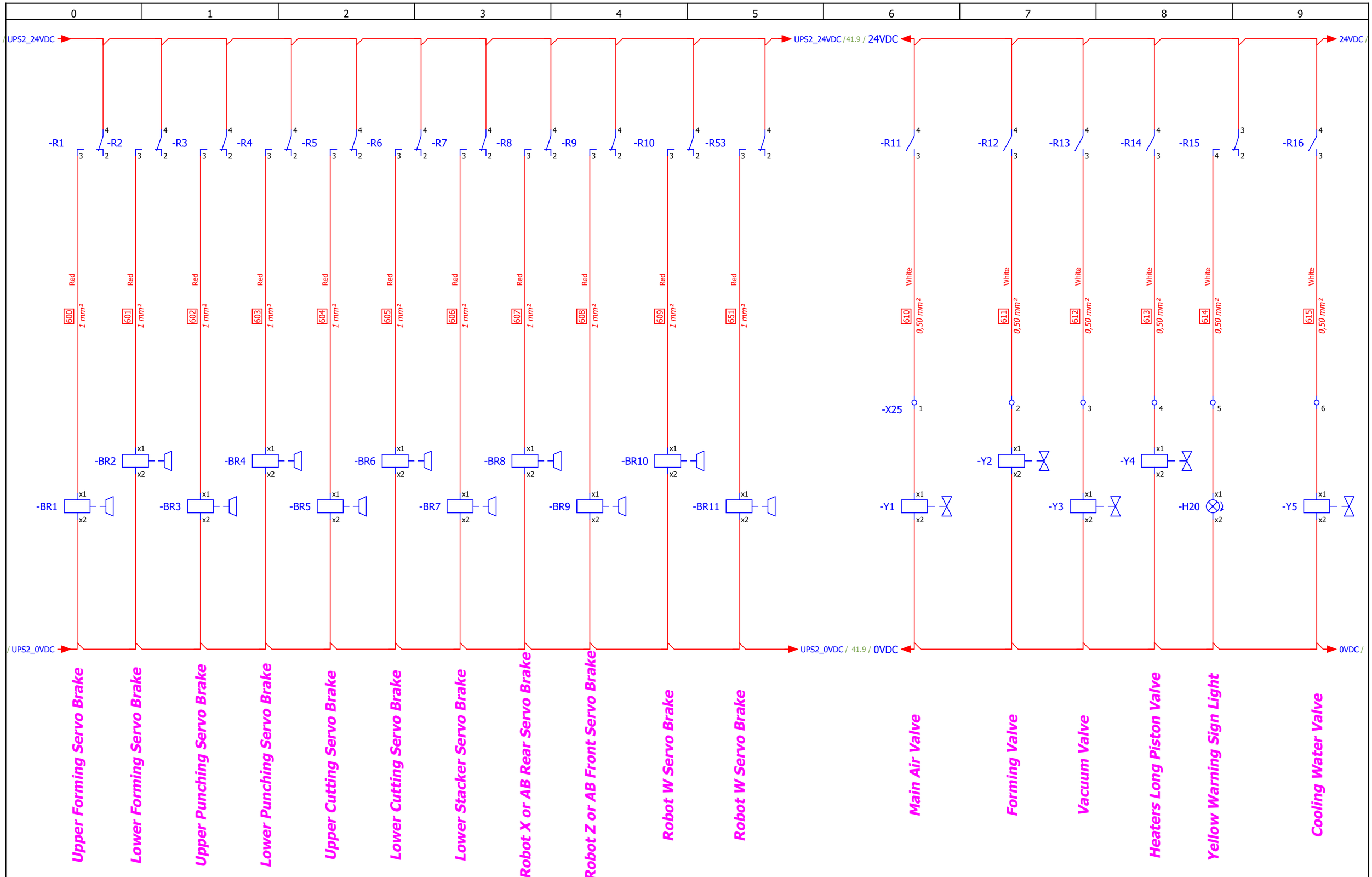

Project Version	v0.2	Author	Görkem Güray	GT FORM	**Güven Teknik Makina ve Kalıp Ind.Trade.Co.Ltd** Kavaklı Mah. Pamukova Sok. No:6 Silivri/İstanbul/Turkey +90 212 485 09 67 info@guventeknikmakina.com	**GTS1000**	RELAY OUPUTS-1
Last Update	13/11/2024	Revision	Berk Samat				Sayfa : 47 /62

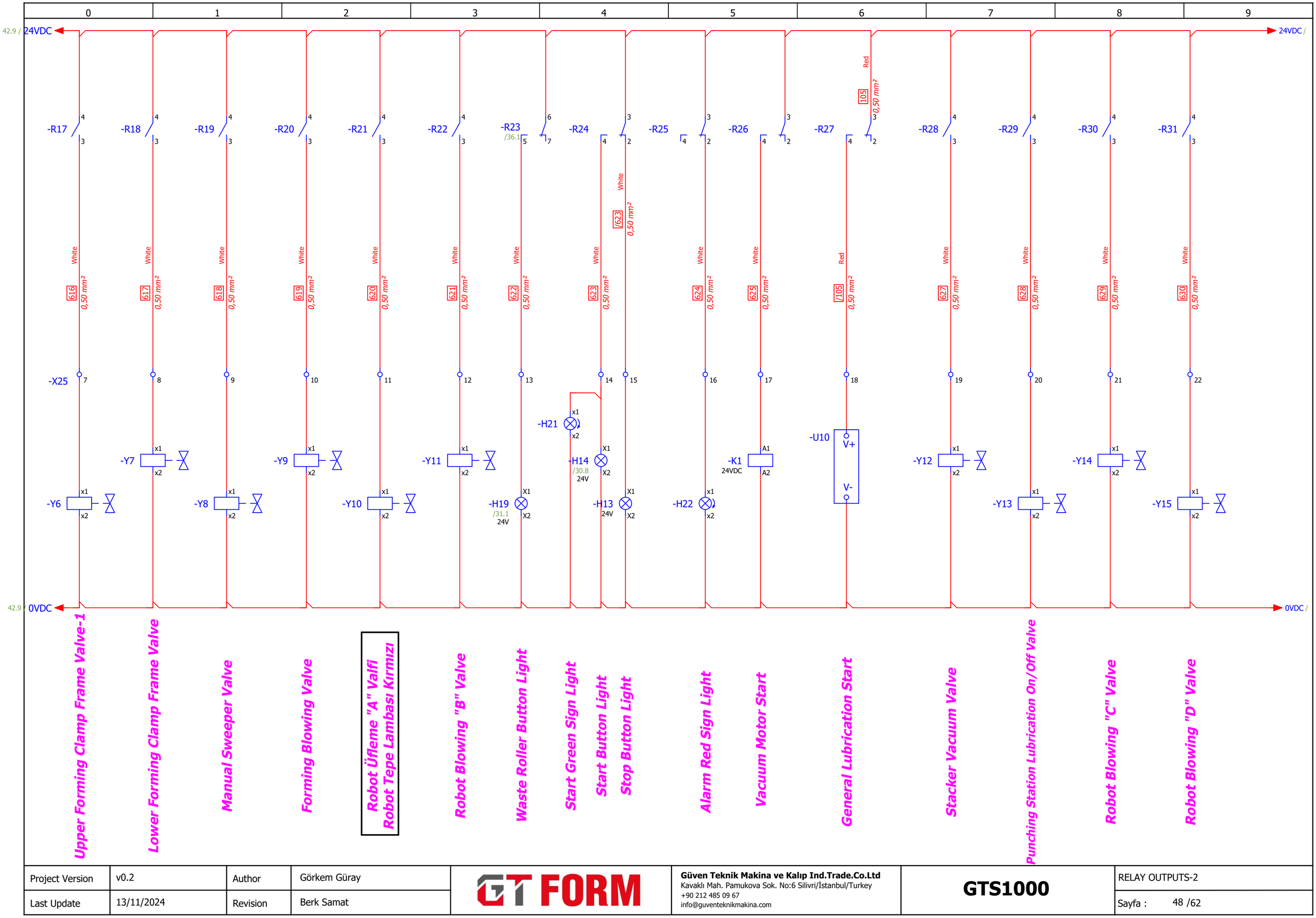

Project Version	v0.2	Author	Görkem Güray	GT FORM	**Güven Teknik Makina ve Kalıp Ind.Trade.Co.Ltd** Kavaklı Mah. Pamukova Sok. No:6 Silivri/İstanbul/Turkey +90 212 485 09 67 info@guventeknikmakina.com	**GTS1000**	RELAY OUTPUTS-2
Last Update	13/11/2024	Revision	Berk Samat				Sayfa : 48 /62

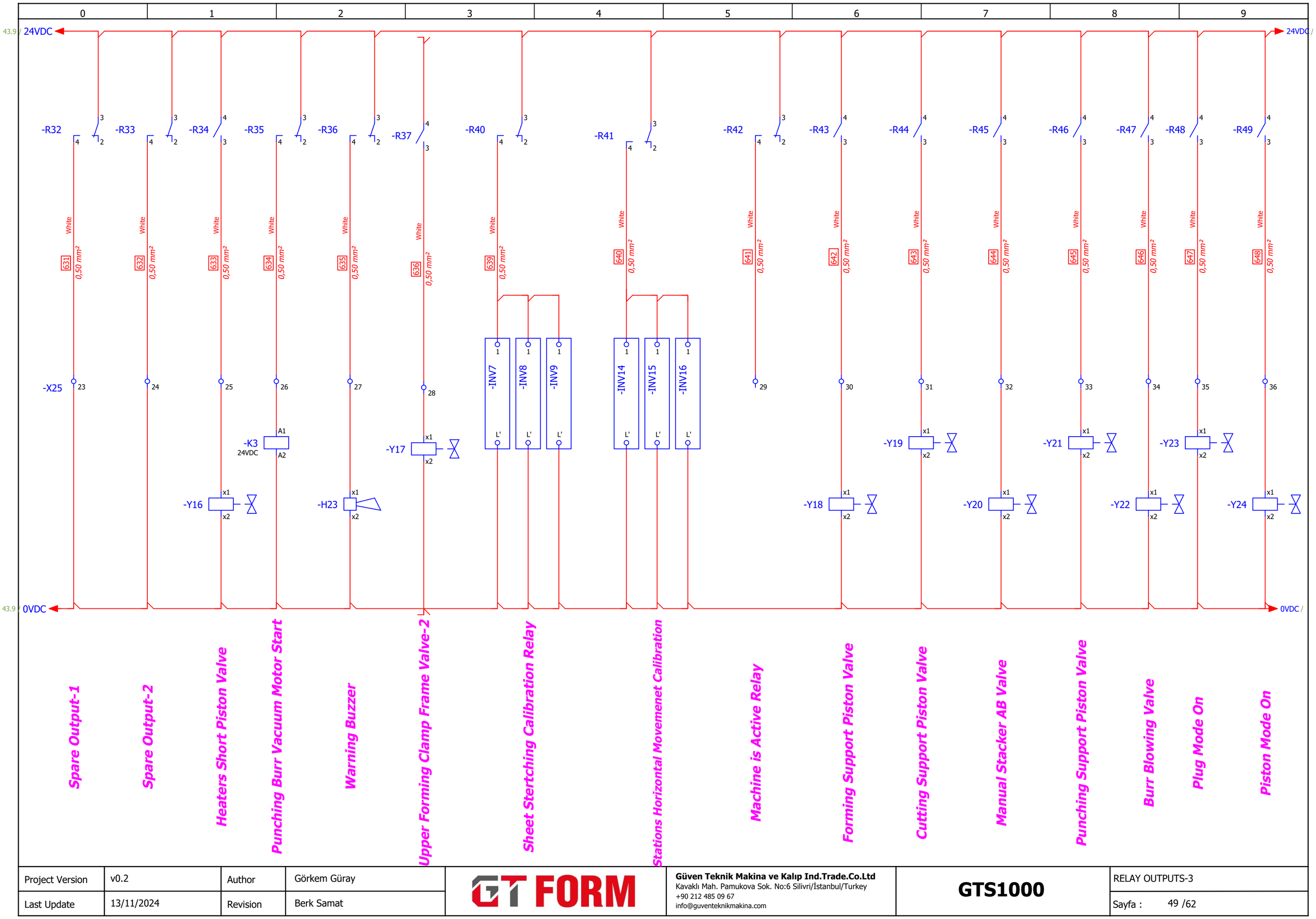

Project Version	v0.2	Author	Görkem Güray	GT FORM	**Güven Teknik Makina ve Kalıp Ind.Trade.Co.Ltd** Kavaklı Mah. Pamukova Sok. No:6 Silivri/İstanbul/Turkey +90 212 485 09 67 info@guventeknikmakina.com	**GTS1000**	RELAY OUTPUTS-3
Last Update	13/11/2024	Revision	Berk Samat				Sayfa : 49 /62

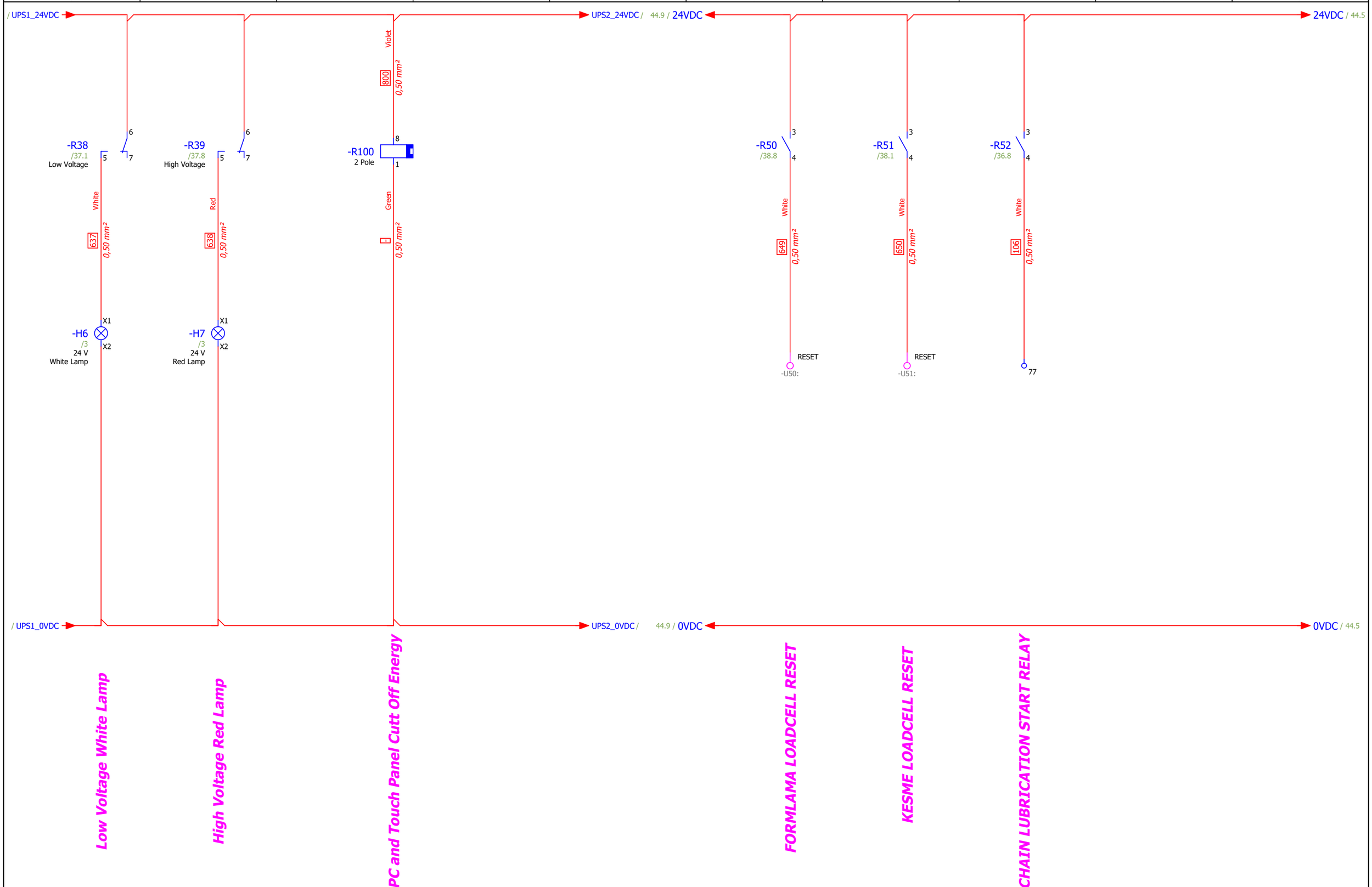

Project Version	v0.2	Author	Görkem Güray	GT FORM	**Güven Teknik Makina ve Kalıp Ind.Trade.Co.Ltd** Kavaklı Mah. Pamukova Sok. No:6 Silivri/İstanbul/Turkey +90 212 485 09 67 info@guventeknikmakina.com	**GTS1000**	RELAY OUTPUTS-4
Last Update	13/11/2024	Revision	Berk Samat				Sayfa : 50 /62

0	1	2	3	4	5	6	7	8	9

FORMALAMA ÜST BUAT
X1

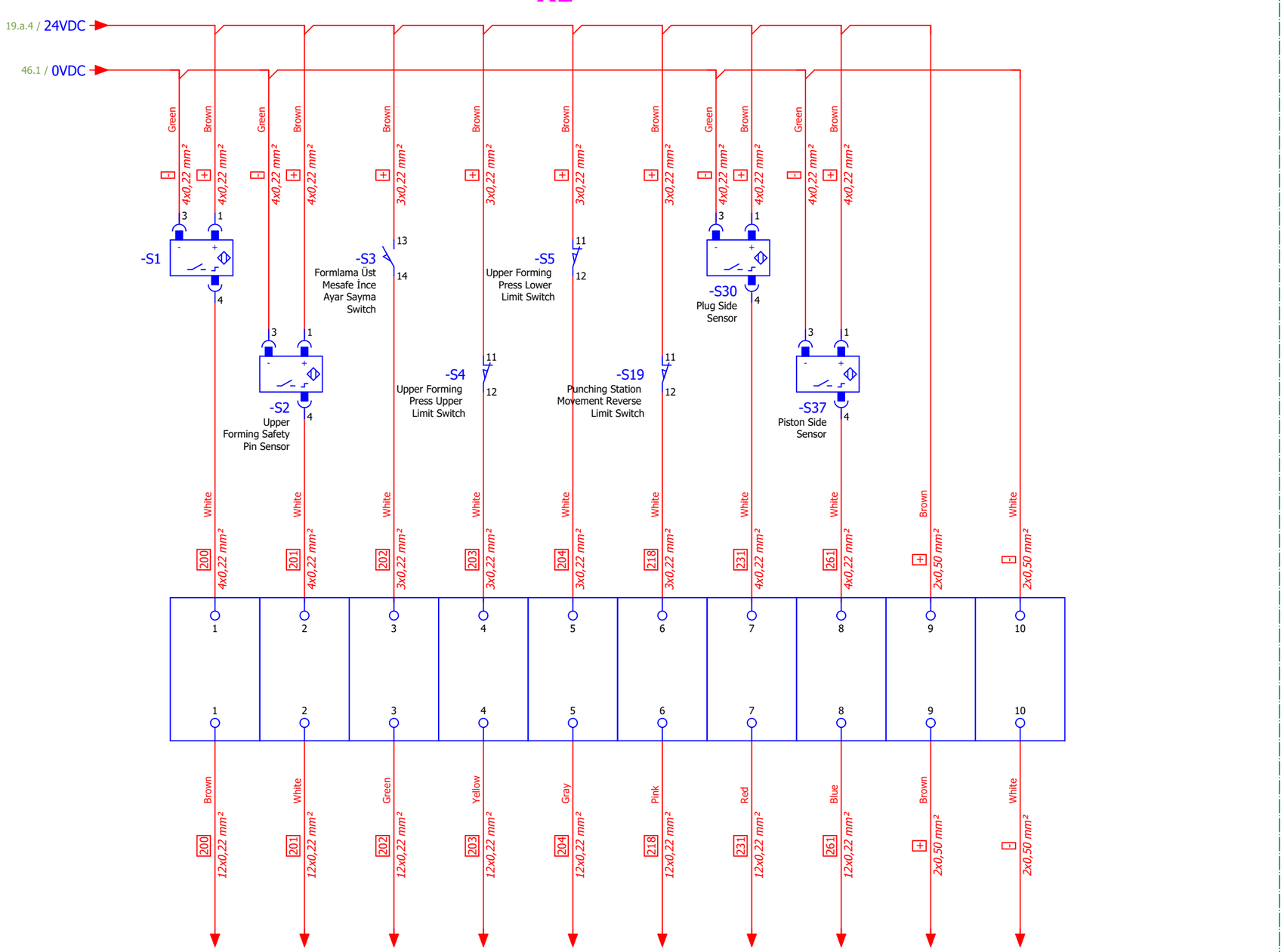

Project Version	v0.2	Author	Görkem Güray	GT FORM	**Güven Teknik Makina ve Kalıp Ind.Trade.Co.Ltd** Kavaklı Mah. Pamukova Sok. No:6 Silivri/İstanbul/Turkey +90 212 485 09 67 info@guventeknikmakina.com	**GTS1000**	JUNCTION BOX
Last Update	13/11/2024	Revision	Berk Samat				Sayfa : 51 /62

0	1	2	3	4	5	6	7	8	9

FORMING LOWER JUNCTION BOX
X2

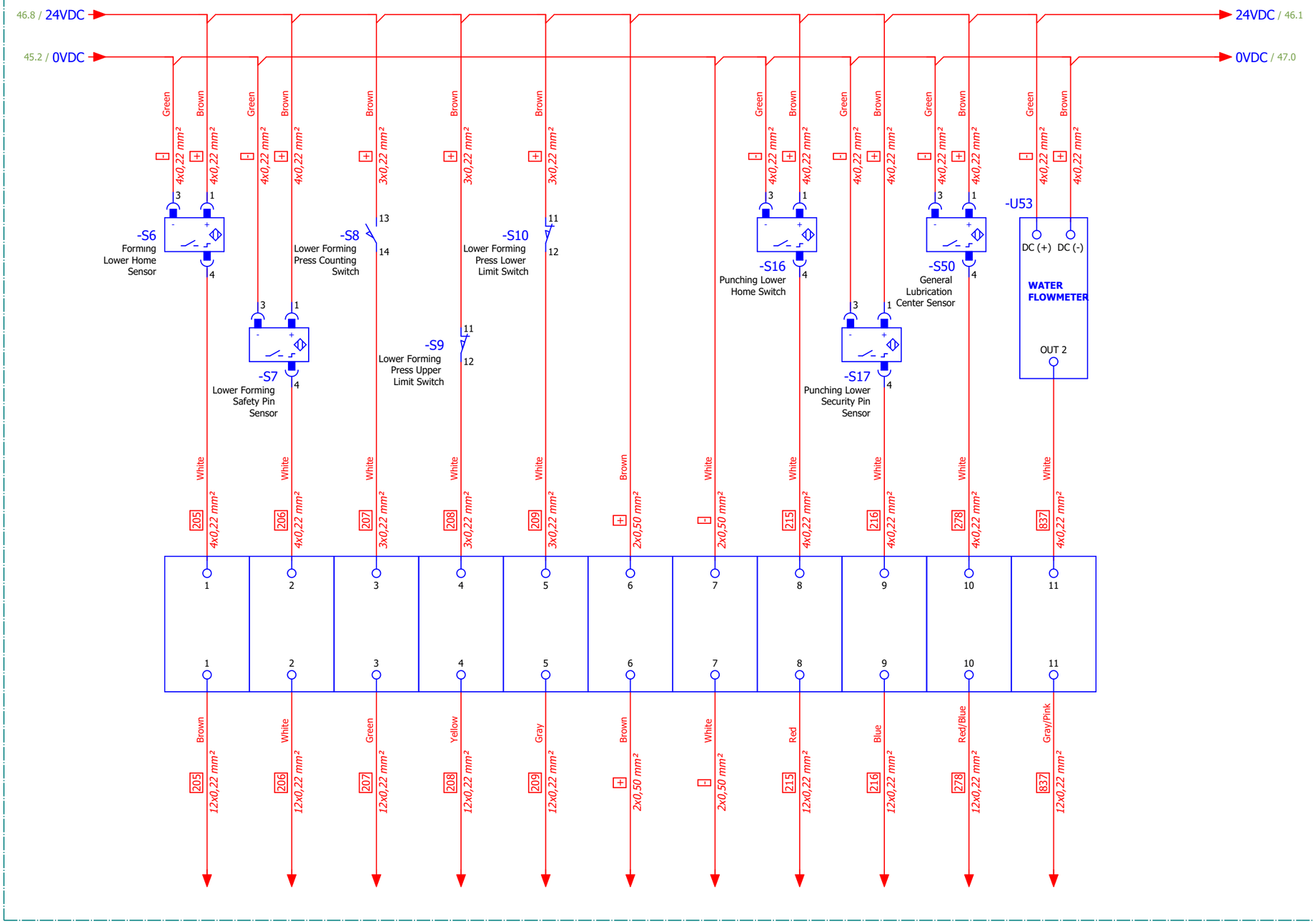

Project Version	v0.2	Author	Görkem Güray	GT FORM	**Güven Teknik Makina ve Kalıp Ind.Trade.Co.Ltd** Kavaklı Mah. Pamukova Sok. No:6 Silivri/İstanbul/Turkey +90 212 485 09 67 info@guventeknikmakina.com	**GTS1000**	BUAT BAĞLANTILARI-2		
Last Update	13/11/2024	Revision	Berk Samat				Sayfa :	52	/62

PUNCHING UPPER JUNCTION BOX
X3

47.9 / 24VDC → 24VDC / 47.0
46.8 / 0VDC → 0VDC / 47.0
4.9 / 10VDC → 10VDC / 47.a.0
47.9 / 0VDC → 0VDC / 47.a.0

-S20 Cutting Upper Home Sensor — Green, Brown 4x0,22 mm² — 3, 1, 4
-S21 Cutting Upper Safety Pin Sensor — Green, Brown 4x0,22 mm² — 3, 1, 4
-S22 Upper Punching Press Counting Switch — Brown 3x0,22 mm² — 13, 14
-S23 /29.1 Upper Cutting Press Upper Limit Switch — Brown 3x0,22 mm² — 11, 12
-S24 /29.8 Upper Cutting Press Lower Limit Switch — Brown 3x0,22 mm² — 11, 12
-S29 /29.8 Cutting Forward Limit Switch — 11, 12
-S38 Cutting Front UP Ruler "+" Position Limit Sensor — Blue, Brown 3x0,22 mm² — 3, 1, 4
-S39 Cutting Front UP Ruler "+" Position Limit Sensor — Blue, Brown 3x0,22 mm² — 3, 1, 4
-S58 Cutting Rear UP Ruler "+" Poistion Limit Sensor — Blue, Brown 3x0,22 mm² — 3, 1, 4
-S59 Cutting Rear UP Ruler "+" Poistion Limit Sensor — Blue, Brown 3x0,22 mm² — 3, 1, 4
-R106 Cutting Upper Front Ruler — Brown, Green 4x0,22 mm² — x3, x2, x1
-R107 Cutting Upper Rear Ruler — Brown, Green 4x0,22 mm² — x3, x2, x1

219	220	221	222	223	229	262	263	292	293	832	833	24v (+)	24v (-)	10v (+)	10v (-)	
White	White	White	White	White	Brown	Black	Black	Black	Black	White	White	Brown	White	Brown	White	
4x0,22 mm²	4x0,22 mm²	3x0,22 mm²	3x0,22 mm²	3x0,22 mm²	3x0,22 mm²	3x0,22 mm²	3x0,22 mm²	3x0,22 mm²	3x0,22 mm²	4x0,22 mm²	4x0,22 mm²	2x0,50 mm²	2x0,50 mm²	2x0,50 mm²	2x0,50 mm²	
1	2	3	4	5	6	7	8	9	10	11	12	13	14	15	16	
1	2	3	4	5	6	7	8	9	10	11	12	13	14	15	16	
Brown	White	Green	Yellow	Gray	Black	Pink	Red	Blue	Violet	Gray/Pink	Red/Blue	Brown	White	Brown	White	
219	220	221	222	223	229	262	263	292	293	832	833	24v (+)	24v (-)	10v (+)	10v (-)	
12x0,22 mm²	12x0,22 mm²	12x0,22 mm²	12x0,22 mm²	12x0,22 mm²	12x0,22 mm²	12x0,22 mm²	12x0,22 mm²	12x0,22 mm²	12x0,22 mm²	12x0,22 mm²	12x0,22 mm²	2x0,50 mm²	2x0,50 mm²	2x0,50 mm²	2x0,50 mm²	

Project Version	v0.2	Author	Görkem Güray	GT FORM	**Güven Teknik Makina ve Kalıp Ind.Trade.Co.Ltd** Kavaklı Mah. Pamukova Sok. No:6 Silivri/İstanbul/Turkey +90 212 485 09 67 info@guventeknikmakina.com	**GTS1000**	BUAT BAĞLANTILARI-3
Last Update	13/11/2024	Revision	Berk Samat				Sayfa : 53 /62

PUNCHING LOWER JUNCTION BOX
X4

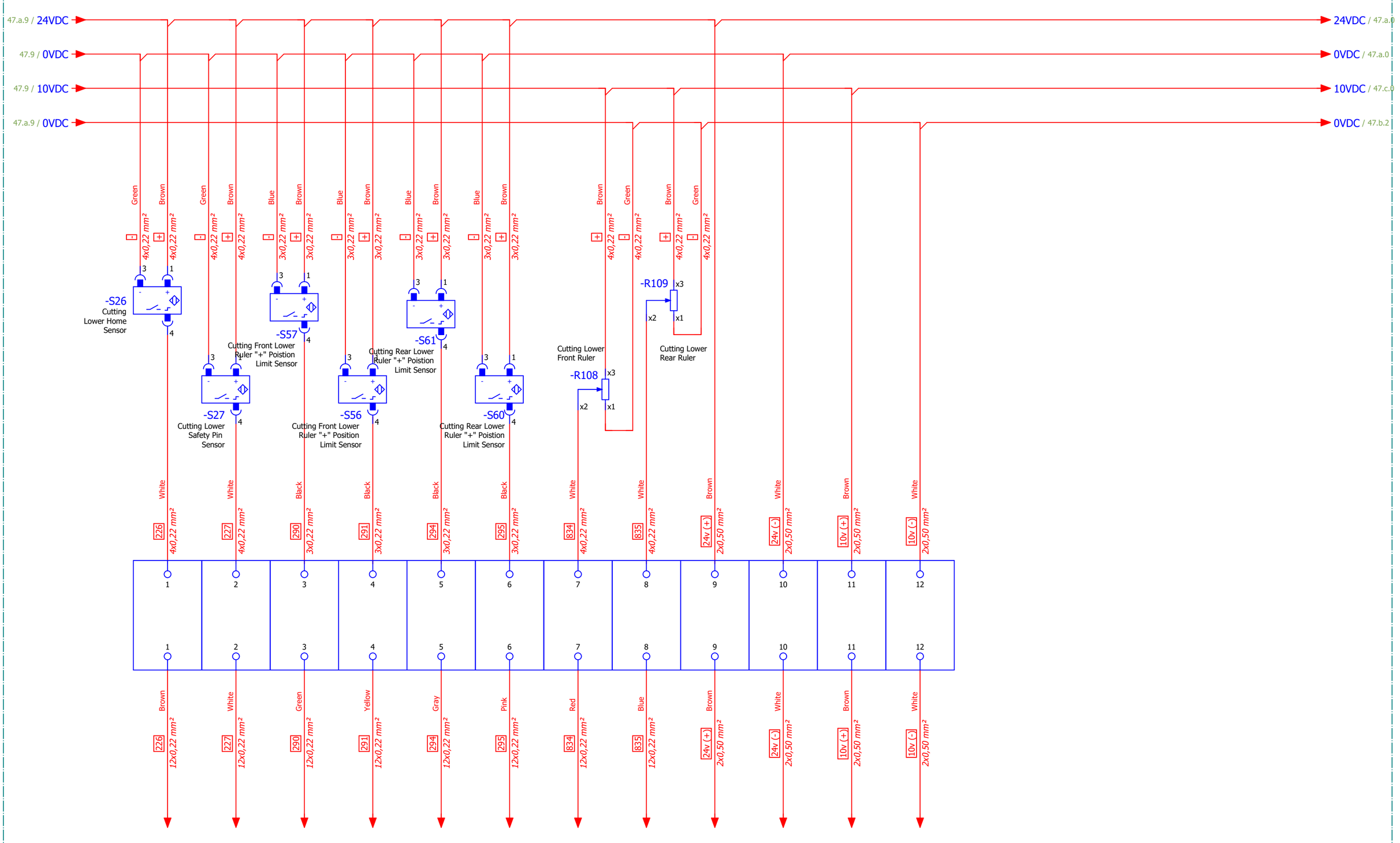

Project Version	v0.2	Author	Görkem Güray	GT FORM	**Güven Teknik Makina ve Kalıp Ind.Trade.Co.Ltd** Kavaklı Mah. Pamukova Sok. No:6 Silivri/İstanbul/Turkey +90 212 485 09 67 info@guventeknikmakina.com	**GTS1000**	BUAT BAĞLANTILARI-4					
Last Update	13/11/2024	Revision	Berk Samat				Sayfa : 54 /62					

0	1	2	3	4	5	6	7	8	9

PUNCHING UPPER JUNCTION BOX
X5

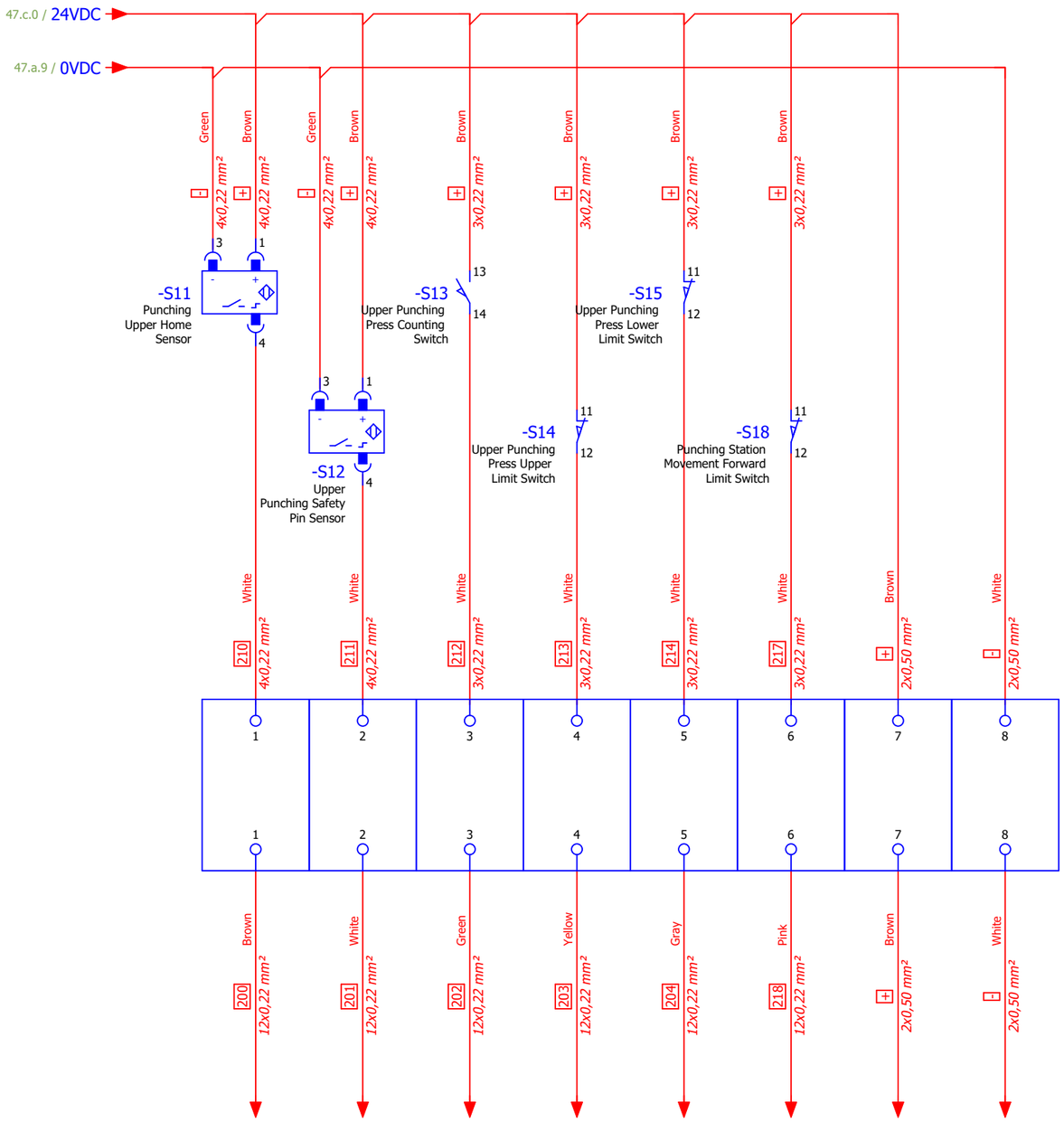

Project Version	v0.2	Author	Görkem Güray	GT FORM	**Güven Teknik Makina ve Kalıp Ind.Trade.Co.Ltd** Kavaklı Mah. Pamukova Sok. No:6 Silivri/İstanbul/Turkey +90 212 485 09 67 info@guventeknikmakina.com	**GTS1000**	BUAT BAĞLANTILARI-5
Last Update	13/11/2024	Revision	Berk Samat				Sayfa : 55 /62

STACKER JUNCTION BOX

47.b.2 / 24VDC
47.c.0 / 0VDC
47.a.9 / 10VDC
47.c.0 / 0VDC

24VDC / 47.d.1
0VDC / 47.c.9
10VDC /
0VDC / 47.c.9

-U54
Emergenct Stop Button
Machine Emergeny Stop

-S69
-S70

-S31
Sheet Stretching
Front Limit
Switch

-S71
Conveyor
Button

-R110
Waste Sheet
Potansiyometer

-S28
/29.1
Stacker Station
Forward Limit
Switch

-S70
Waste Shett
On-Off
Button

-H26
Waste Sheet
Button Lamp

-U55
/47.d.2
FRONT STREETCHING
AND ROBOT SIGNAL

10VDC SUPPLY

GENERAL 24VDC
SUPPLY

Project Version	v0.2	Author	Görkem Güray	GT FORM	**Güven Teknik Makina ve Kalıp Ind.Trade.Co.Ltd** Kavaklı Mah. Pamukova Sok. No:6 Silivri/İstanbul/Turkey +90 212 485 09 67 info@guventeknikmakina.com	**GTS1000**	BUAT BAĞLANTILARI-6	
Last Update	13/11/2024	Revision	Berk Samat				Sayfa :	56 /62

STACKER JUNCTION BOX

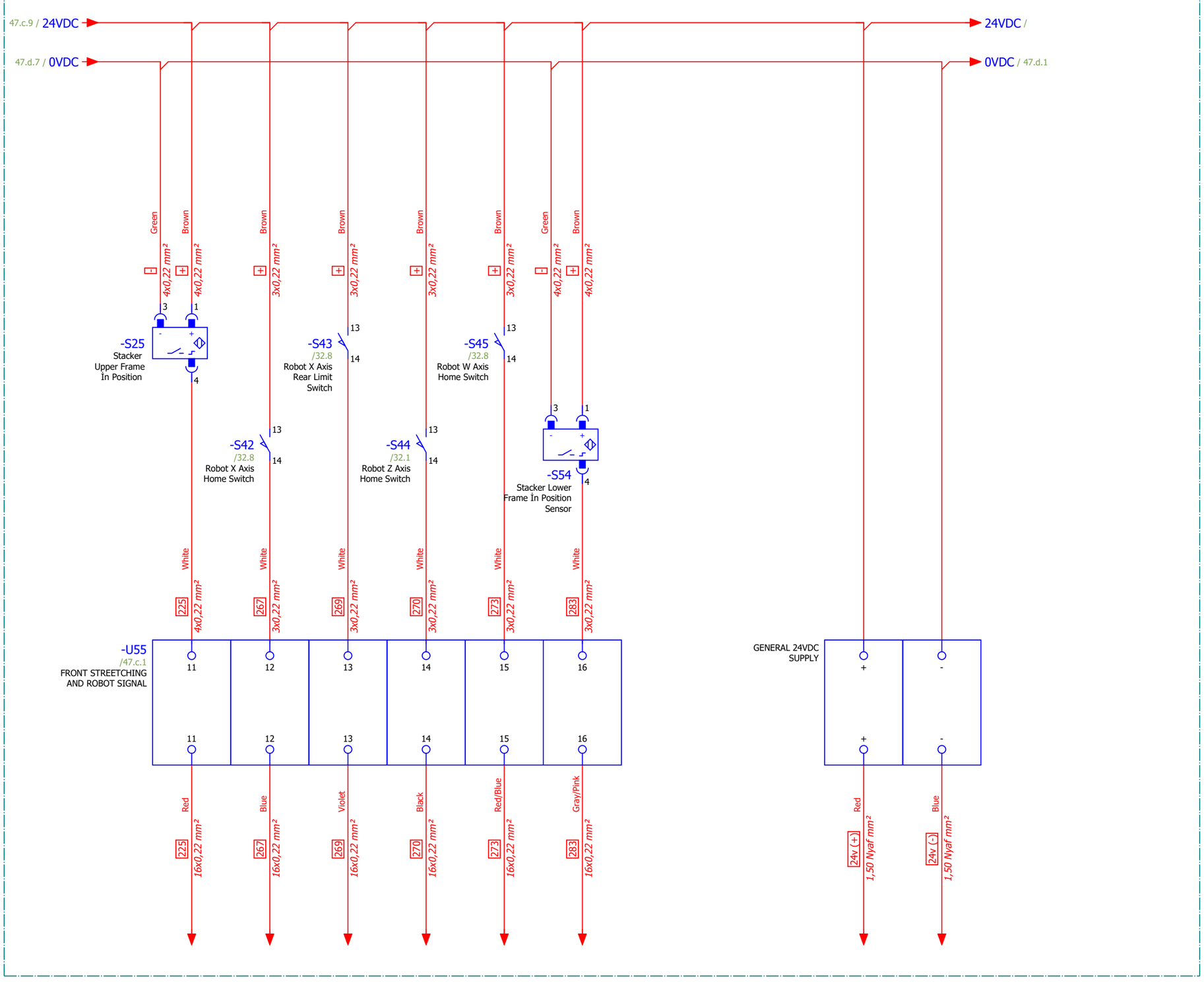

Project Version	v0.2	Author	Görkem Güray	GT FORM	**Güven Teknik Makina ve Kalıp Ind.Trade.Co.Ltd** Kavaklı Mah. Pamukova Sok. No:6 Silivri/İstanbul/Turkey +90 212 485 09 67 info@guventeknikmakina.com	**GTS1000**	BUAT BAĞLANTILARI-7
Last Update	13/11/2024	Revision	Berk Samat				Sayfa : 57 /62

FRONT STRETCHING ENCODER X6

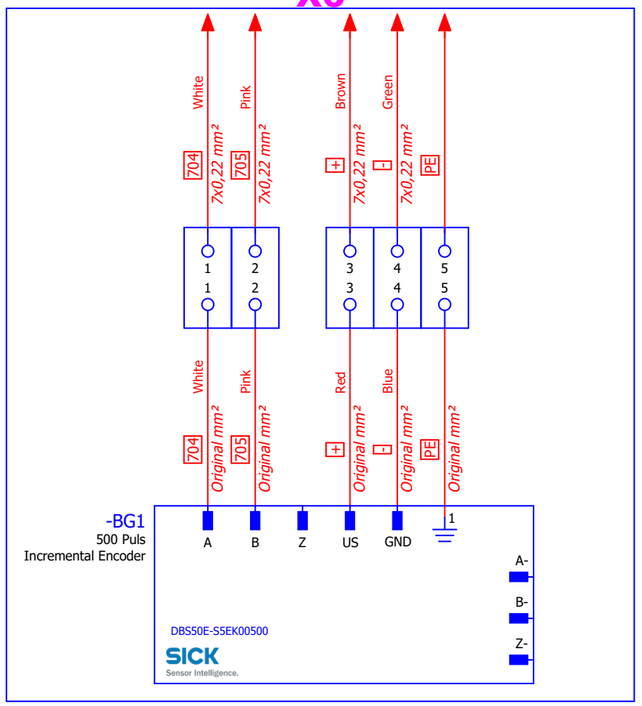

MIDDLE STRETCHING ENCODER X7

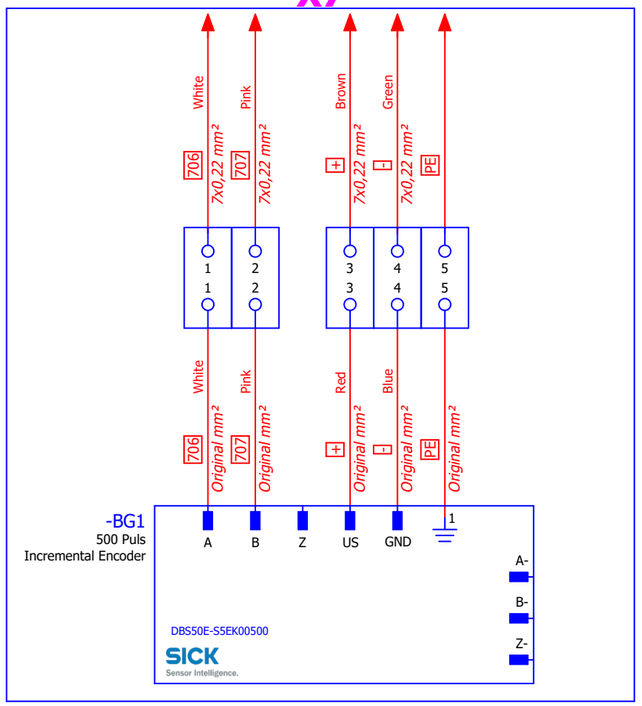

REAR STRETCHING ENCODER X8

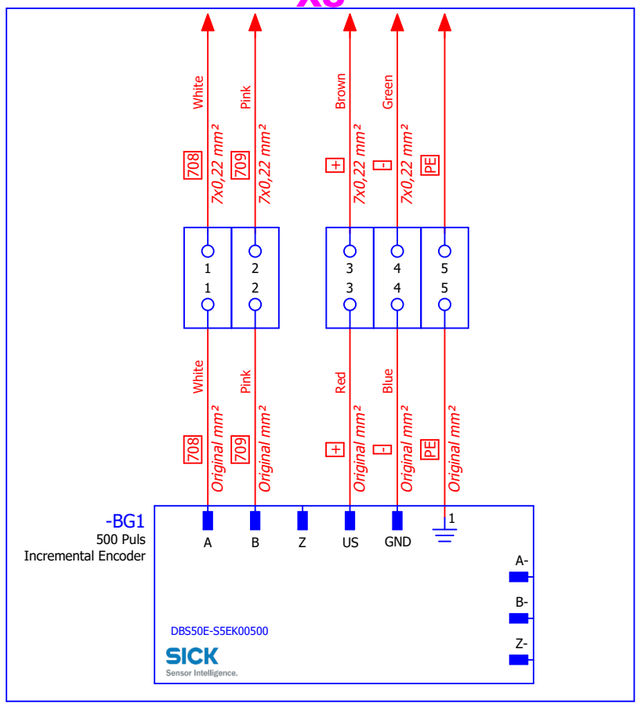

CUTTING-STACKER ENCODER JUNCTION BOX X9

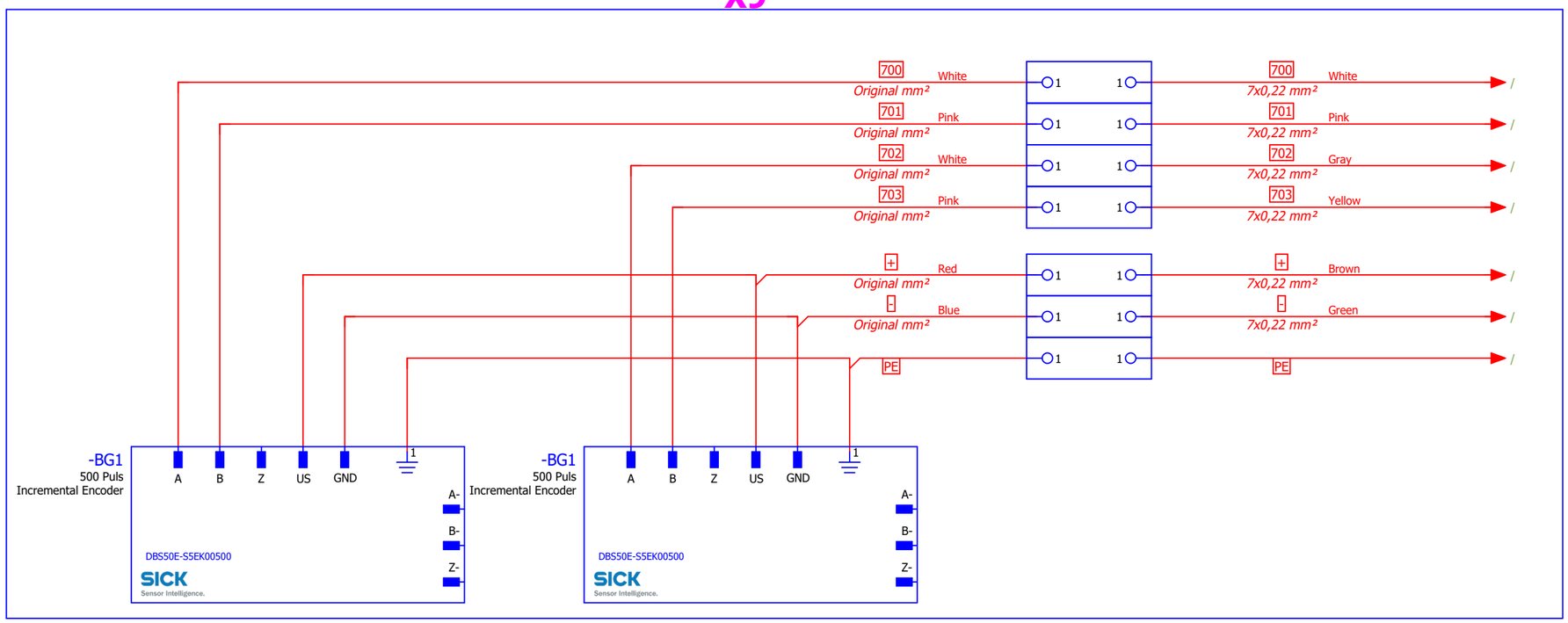

PUNCHING STRETCHING ENCODER X13

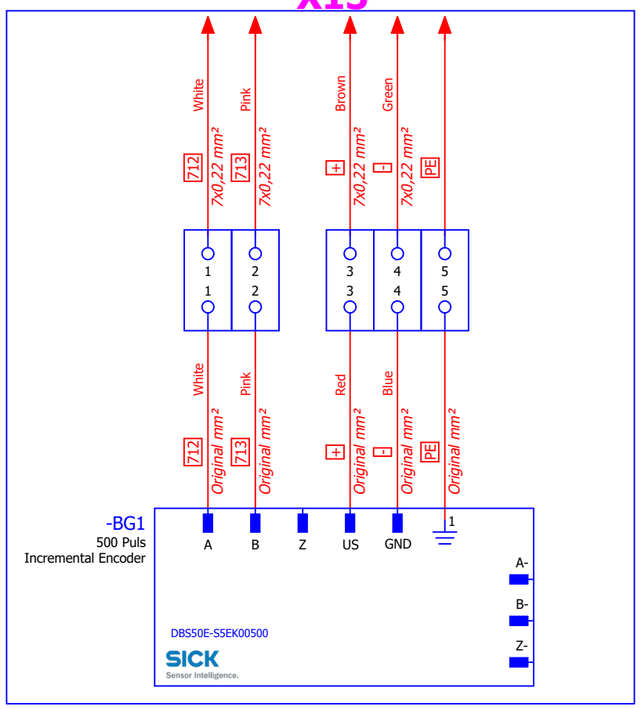

Project Version	v0.2	Author	Görkem Güray	GT FORM	**Güven Teknik Makina ve Kalıp Ind.Trade.Co.Ltd** Kavaklı Mah. Pamukova Sok. No:6 Silivri/İstanbul/Turkey +90 212 485 09 67 info@guventeknikmakina.com	**GTS1000**	ENCODER JUNCTION BOX
Last Update	13/11/2024	Revision	Berk Samat				Sayfa : 58 /62

CHAIN AND UNWINDER BUTTON BOX

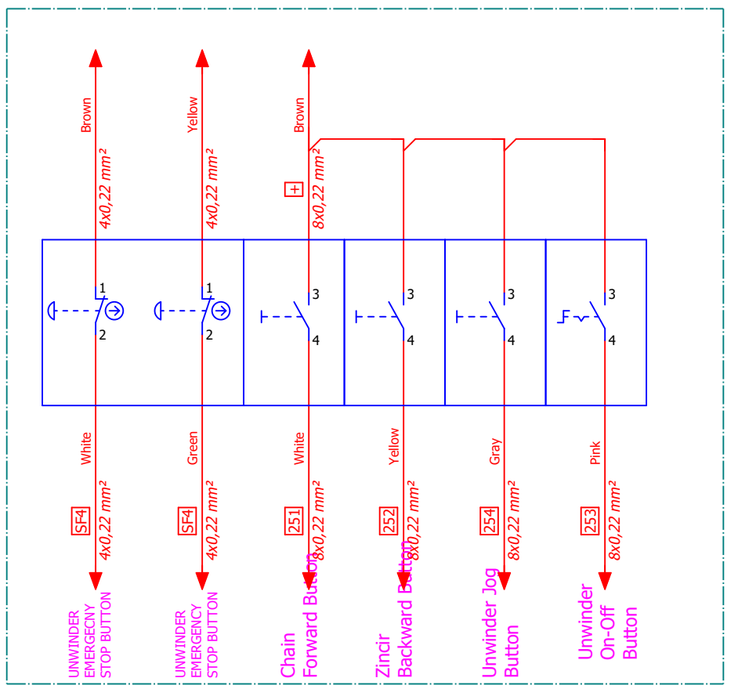

WASTE SHEET BUTTON BOX

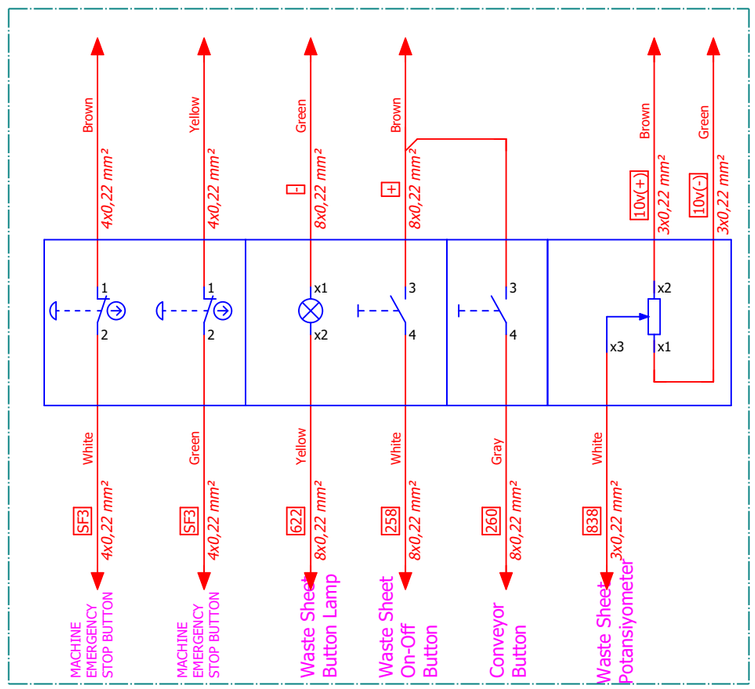

CHAIN AND UNWINDER BUTTON BOX

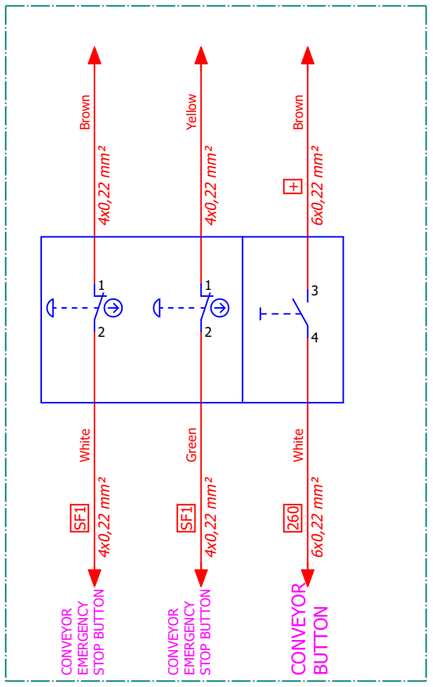

-U61

3 STATION WITHOUT ROBOT

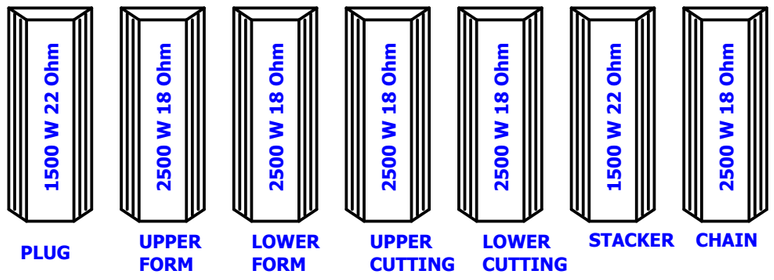

-U62

4 STATION WITHOUT ROBOT

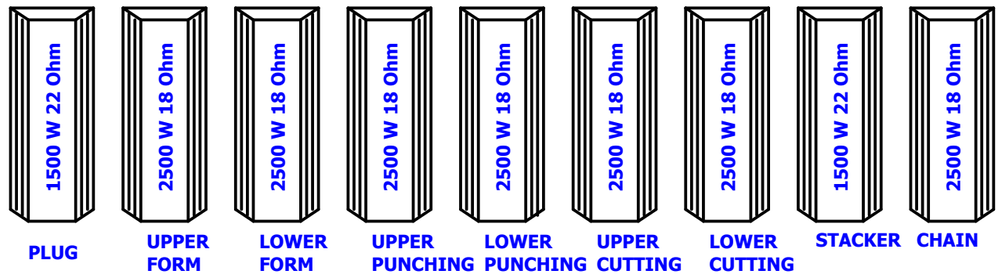

-U63
/19.a.2

4 STATION WITH ROBOT

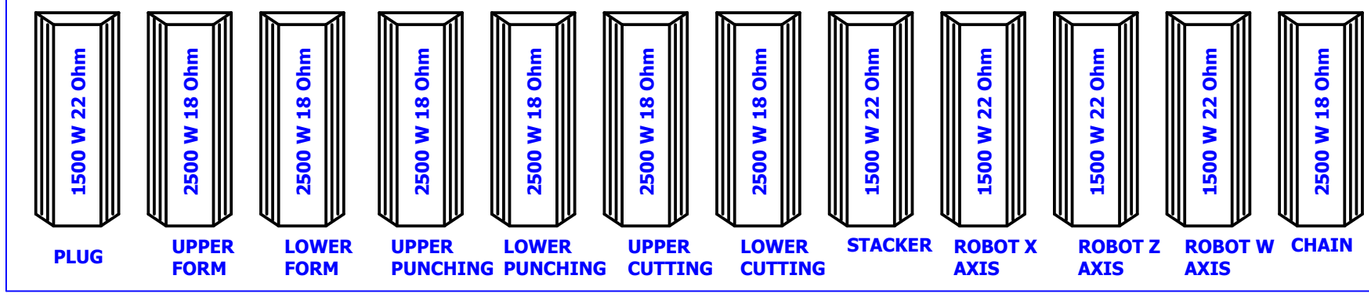

-U64

3 STATION WITH ROBOT

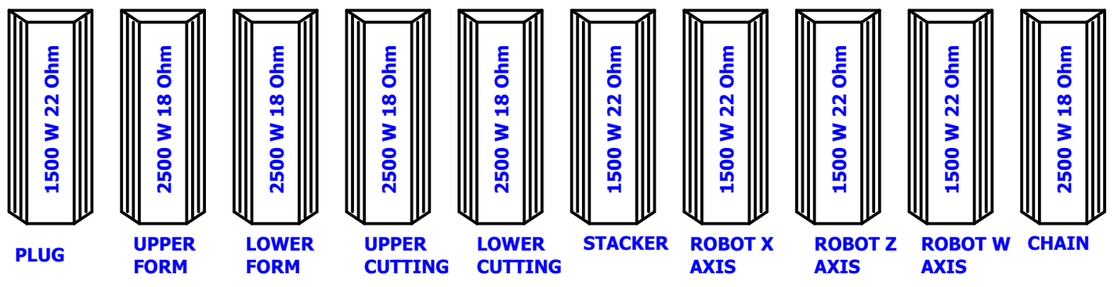

Waste Roller 16 Contact Connection
X10

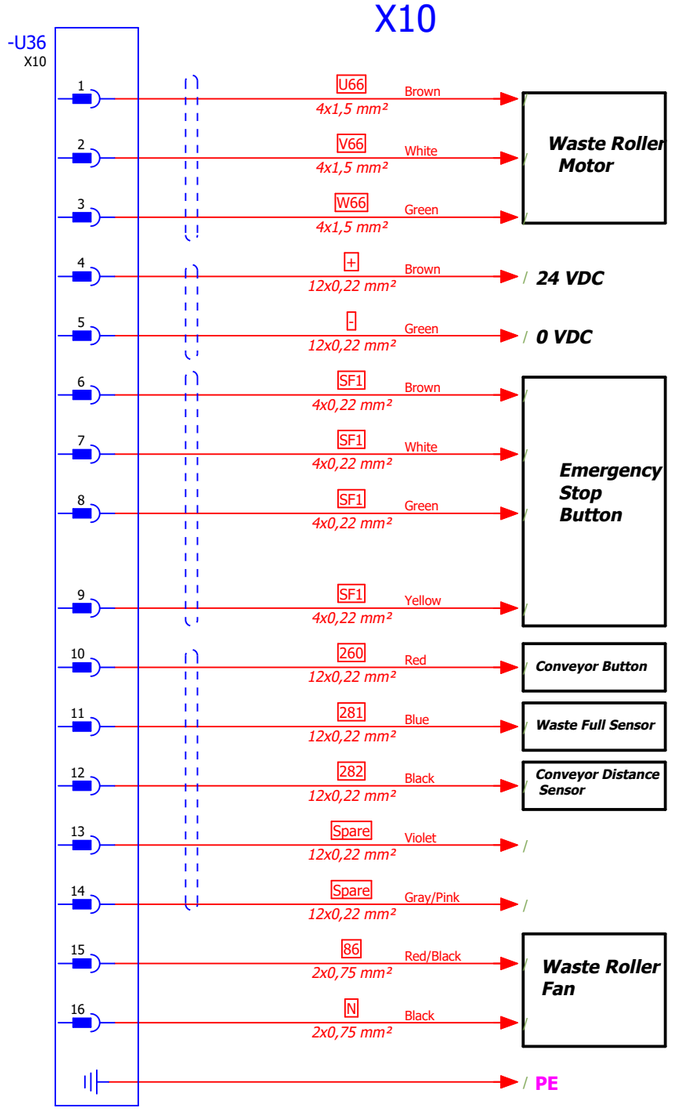

Conveyor 16 Contact Connection
X11

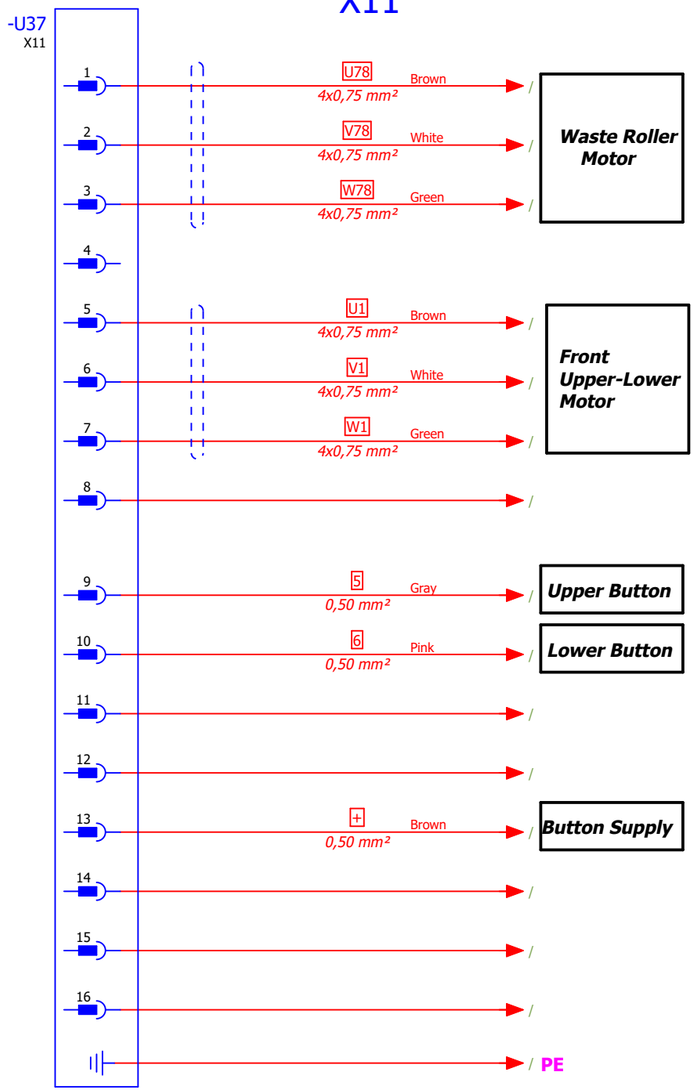

Unwinder 6 Contact Connections
X12

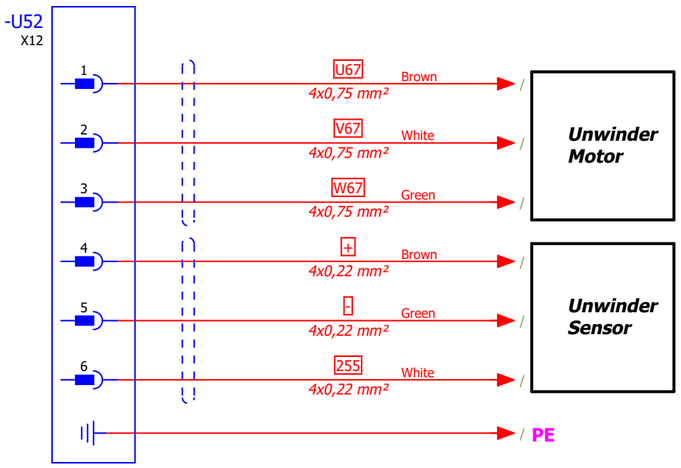

Project Version	v0.2	Author	Görkem Güray	GT FORM	**Güven Teknik Makina ve Kalıp Ind.Trade.Co.Ltd** Kavaklı Mah. Pamukova Sok. No:6 Silivri/İstanbul/Turkey +90 212 485 09 67 info@guventeknikmakina.com	**GTS1000**	SOCKET CONNECTIONS
Last Update	13/11/2024	Revision	Berk Samat				Sayfa : 61 /62

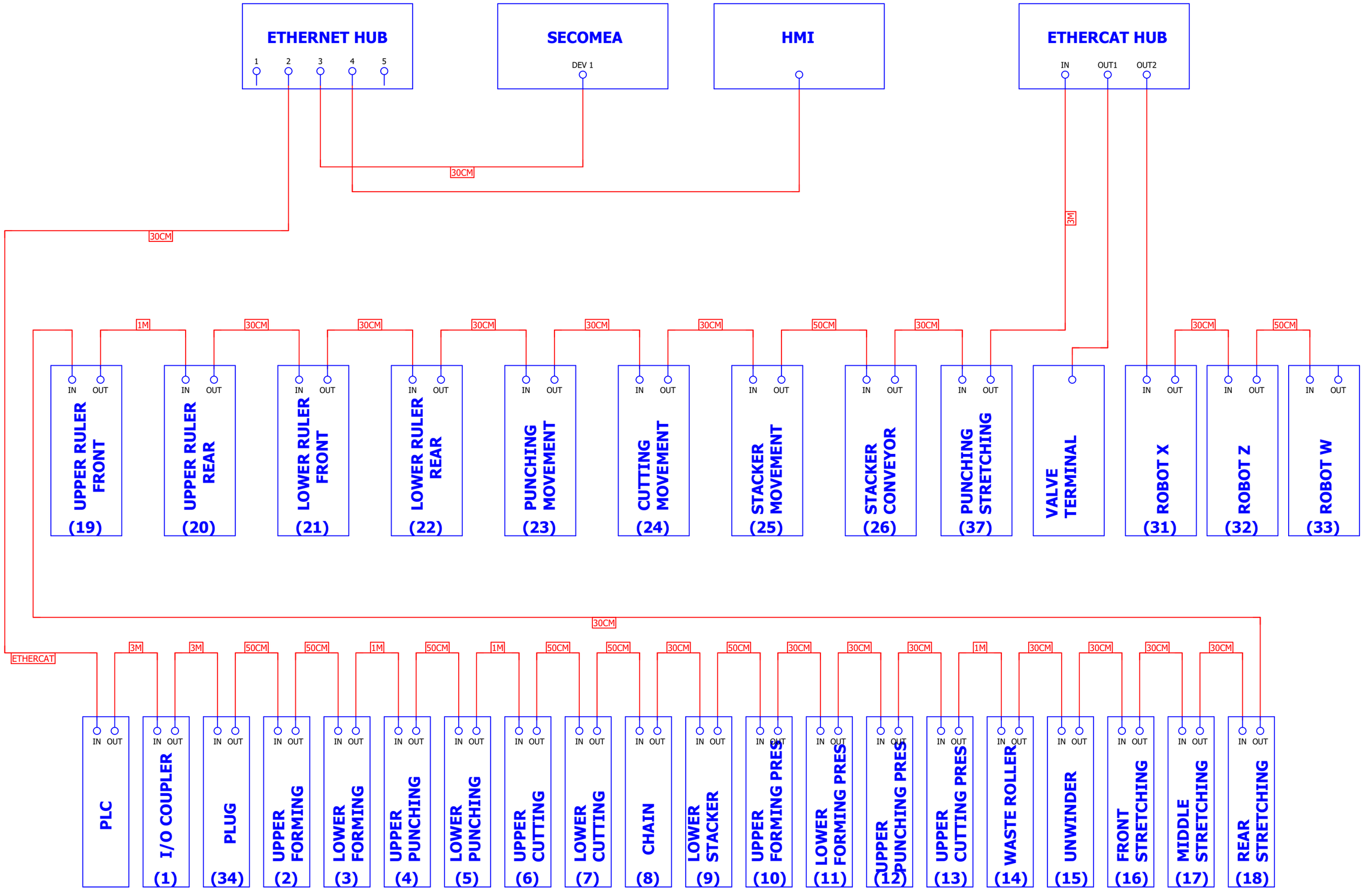

Project Version	v0.2	Author	Görkem Güray	GT FORM	**Güven Teknik Makina ve Kalıp Ind.Trade.Co.Ltd** Kavaklı Mah. Pamukova Sok. No:6 Silivri/İstanbul/Turkey +90 212 485 09 67 info@guventeknikmakina.com	**GTS1000**	AĞ DİYAGRAMI TR
Last Update	13/11/2024	Revision	Berk Samat				Sayfa : 62 /62