Güven Teknik Makina ve Kalıp Ind.Trade.Co.Ltd.
Kavaklı Mah. Pamukova Sok. No:6 Silivri/İstanbul/Turkey
+90 212 485 09 67
info@guventeknikmakina.com

DEVIRMELI

GT8565M / GT7050M / GT7030M



Elektrik Besleme / Electrical Supply :	380V AC
Frekans / Frequency :	50 Hz
Besleme Kablosu / Supply Cable :	GT8565M 5x120 mm² (3P + N + PE) / GT7050-7030M 5x70 mm² (3P + N + PE)
Toplam Güç / Total Power :	GT8565M : 346.4 kW GT7050/7030M : 249.8 kW
Isıtıcı Gücü / Heaters Power :	GT8565M : 298.8 kw GT7050/7030M : 223.7 kW
Ana Şalter / Main Circuit Breaker :	Schneider G40F3A400

Cable Color Codes

AC Phase : Black	*General 24V DC : Brown*	*Control UPS 24V DC : Violet*	*Brake UPS 334V DC : Red*
AC Neutral : Blue	*General 0V DC : Green*	*Control UPS 0V DC : Green*	*Brake UPS 0V DC : Gray*
Earth : Yellow-Green			

Project Version : v0.1
Last Update : 23/01/2026

Number of pages 40

EN

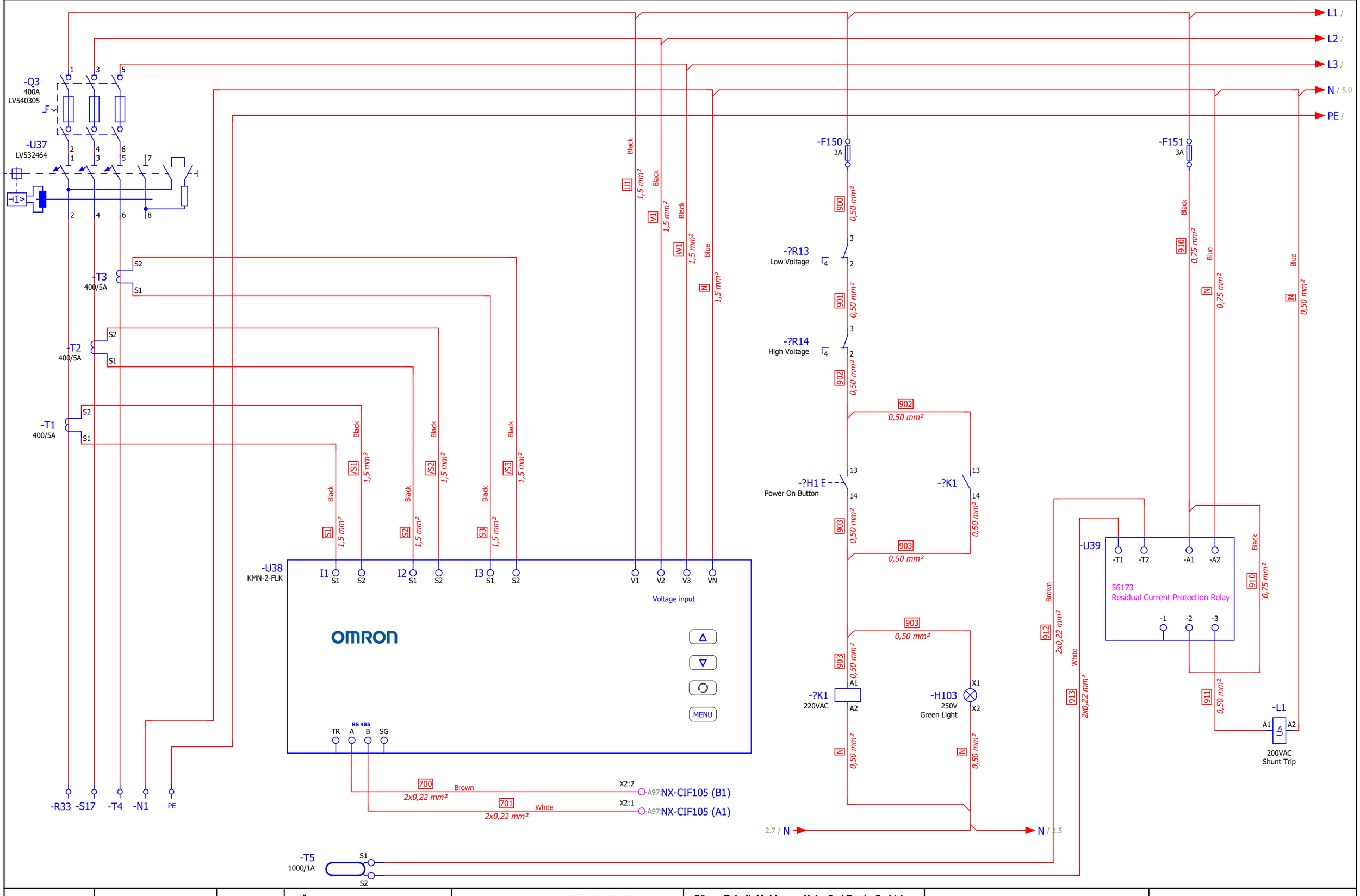

Project Version	v0.1	Author	OĞULCAN YILMAZ	GT FORM	**Güven Teknik Makina ve Kalıp Ind.Trade.Co.Ltd** Kavaklı Mah. Pamukova Sok. No:6 Silivri/İstanbul/Turkey +90 212 485 09 67 info@guventeknikmakina.com	**DEVIRMELI**	MAIN SUPPLY-1
Last Update	23/01/2026	Revision					Page : 2 /40

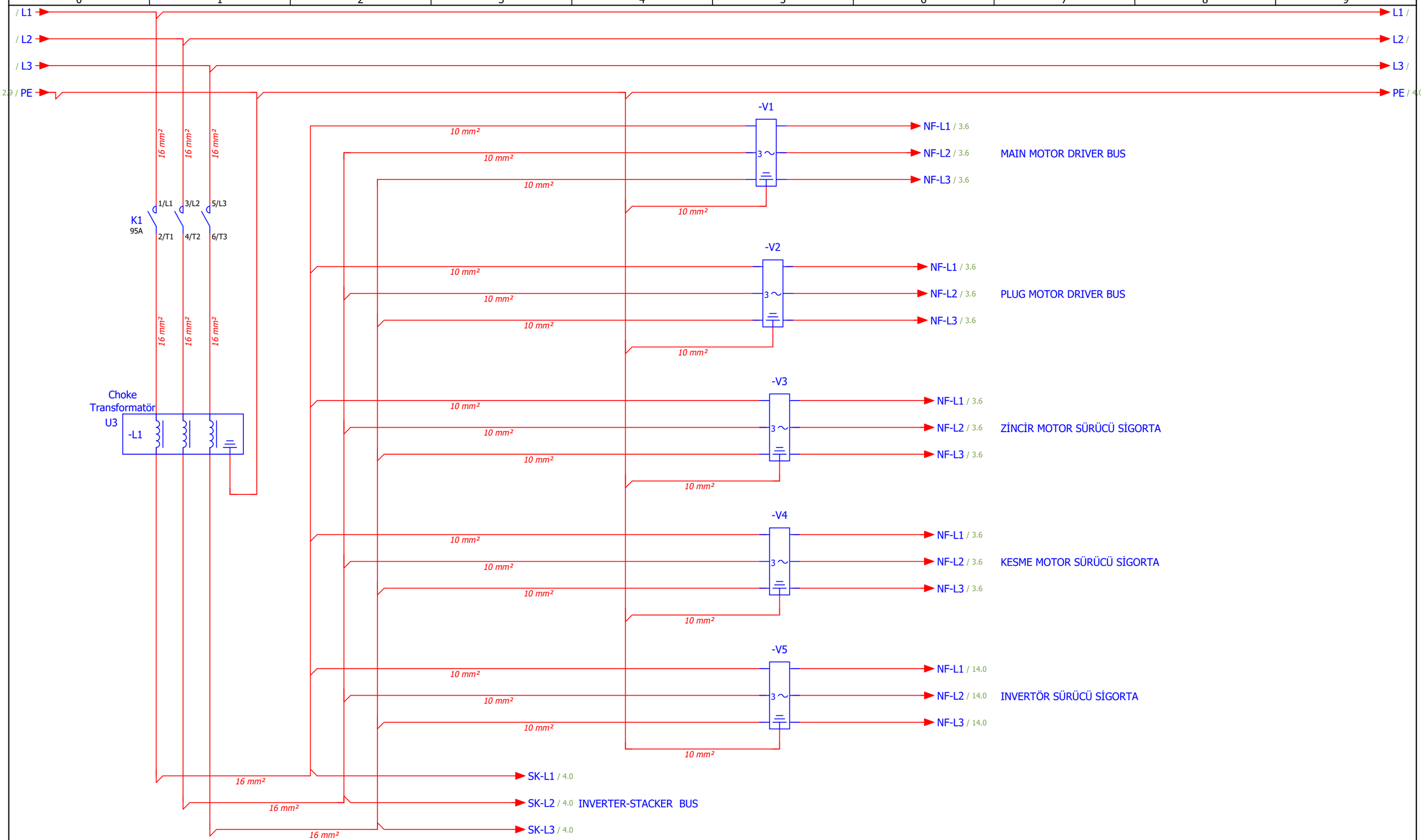

Project Version	v0.1	Author	OĞULCAN YILMAZ	GT FORM	**Güven Teknik Makina ve Kalıp Ind.Trade.Co.Ltd** Kavaklı Mah. Pamukova Sok. No:6 Silivri/İstanbul/Turkey +90 212 485 09 67 info@guventeknikmakina.com	**DEVIRMELI**	MAIN SUPPLY -2
Last Update	23/01/2026	Revision					Page : 3 /40

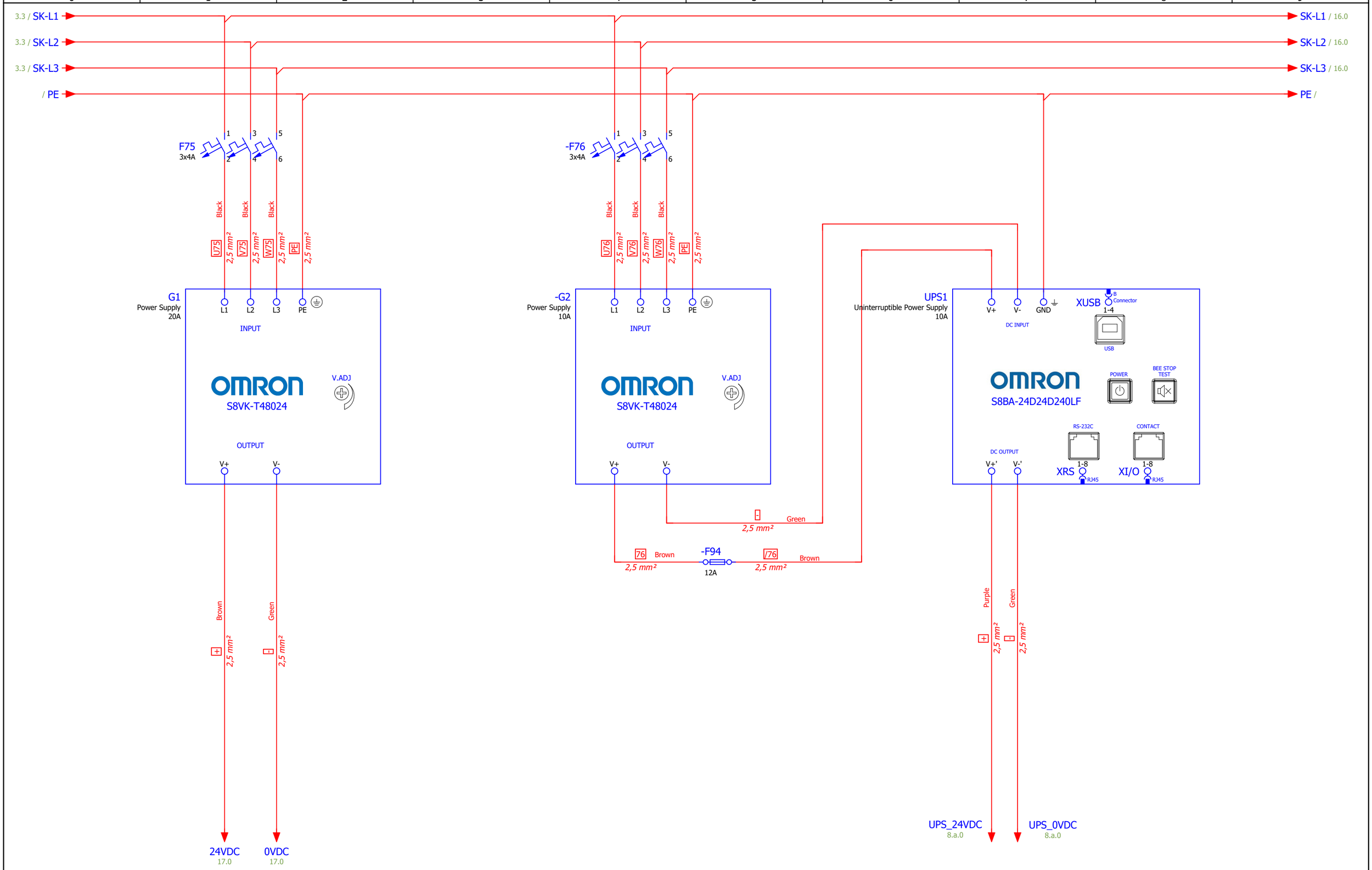

Project Version	v0.1	Author	OĞULCAN YILMAZ	GT FORM	**Güven Teknik Makina ve Kalıp Ind.Trade.Co.Ltd** Kavaklı Mah. Pamukova Sok. No:6 Silivri/İstanbul/Turkey +90 212 485 09 67 info@guventeknikmakina.com	**DEVIRMELI**	CONTROL SUPPLY
Last Update	23/01/2026	Revision					Page : 4 /40

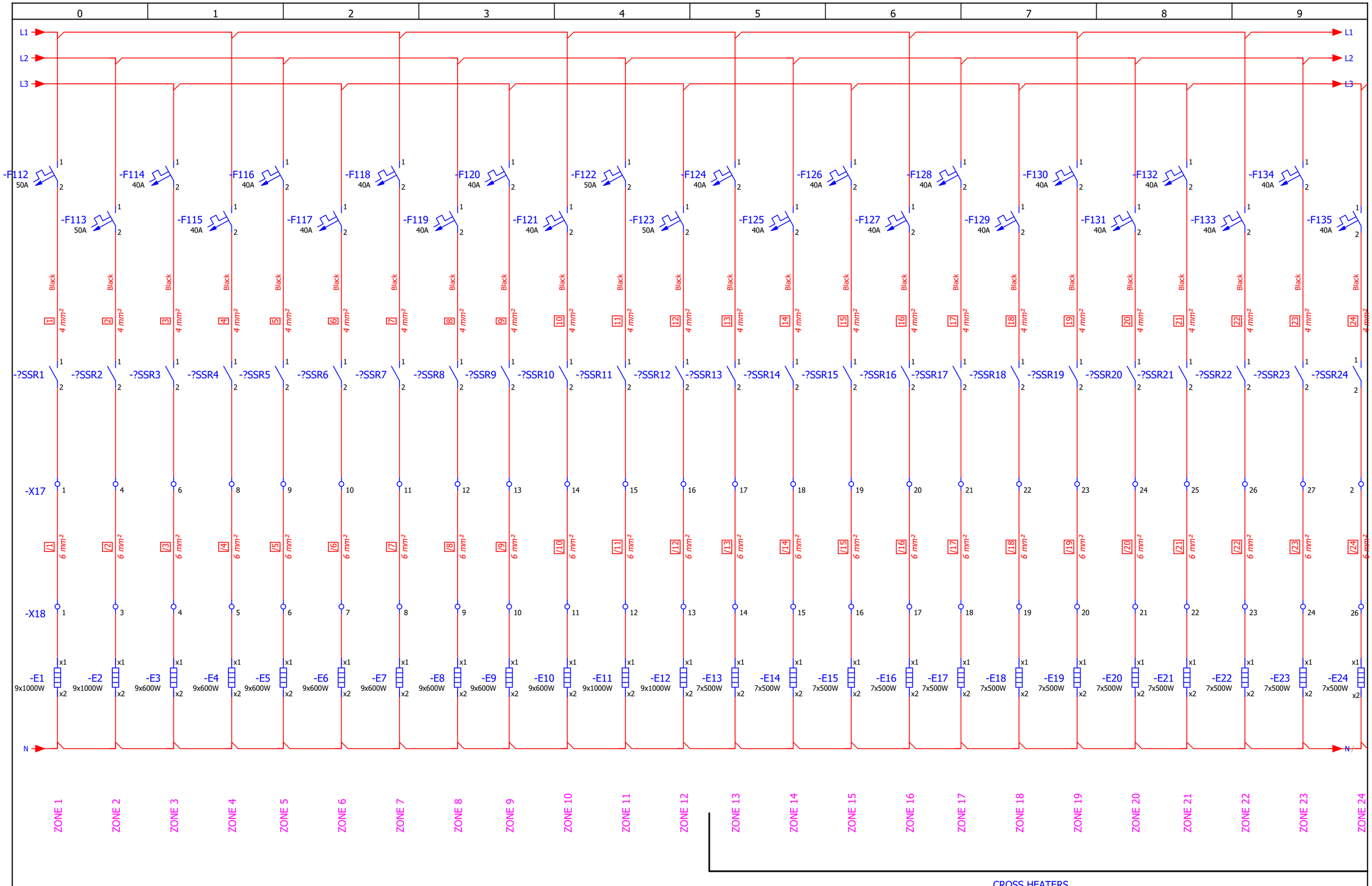

Project Version	v0.1	Author	OĞULCAN YILMAZ	GT FORM	**Güven Teknik Makina ve Kalıp Ind.Trade.Co.Ltd** Kavaklı Mah. Pamukova Sok. No:6 Silivri/İstanbul/Turkey +90 212 485 09 67 info@guventeknikmakina.com	**DEVIRMELI**	UPPER HEATERS
Last Update	23/01/2026	Revision					Page : 5 /40

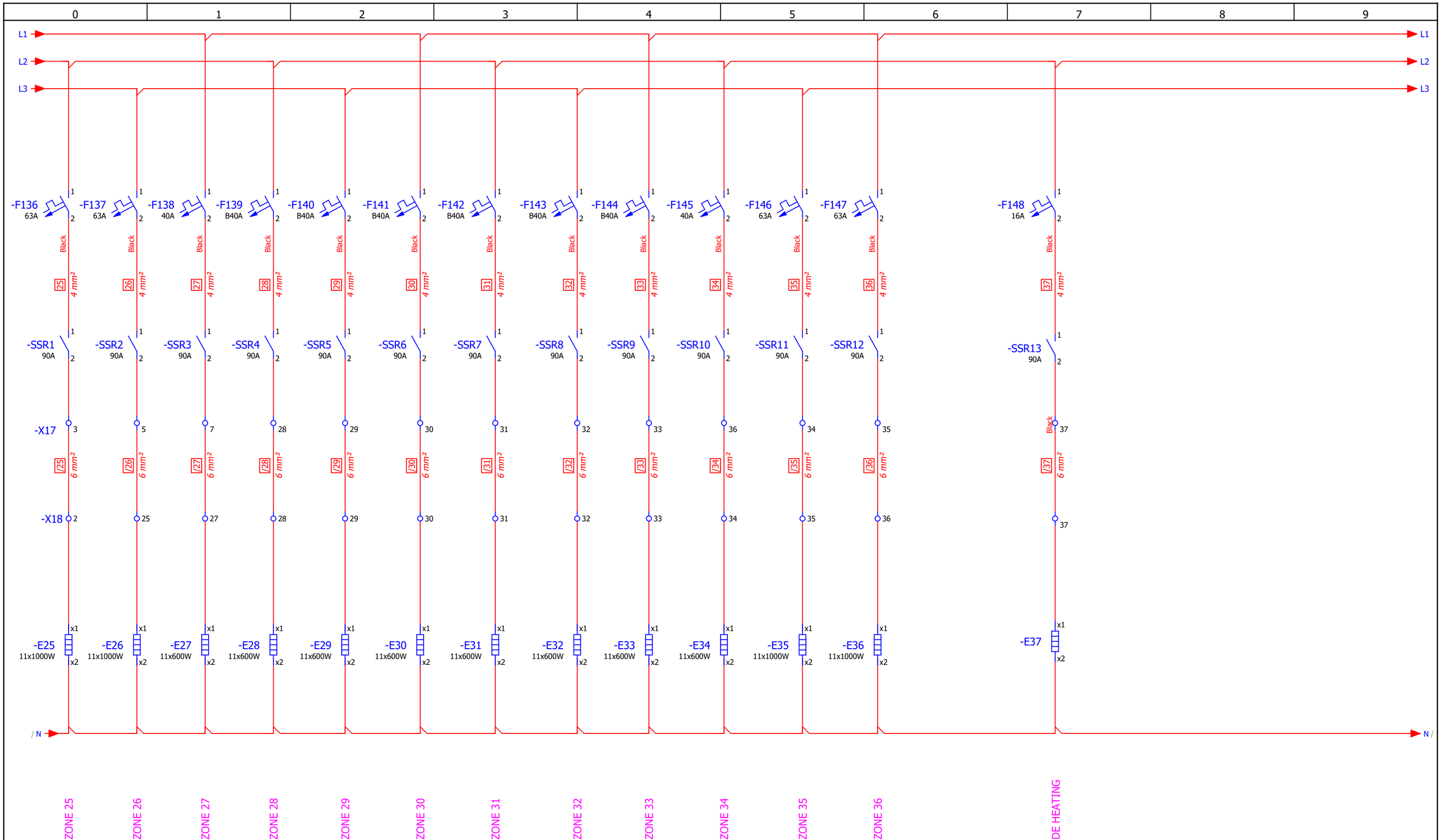

Project Version	v0.1	Author	OĞULCAN YILMAZ	GT FORM	**Güven Teknik Makina ve Kalıp Ind.Trade.Co.Ltd** Kavaklı Mah. Pamukova Sok. No:6 Silivri/İstanbul/Turkey +90 212 485 09 67 info@guventeknikmakina.com	**DEVIRMELI**	LOWER HEATERS
Last Update	23/01/2026	Revision					Page : 6 /40

6.9 / N

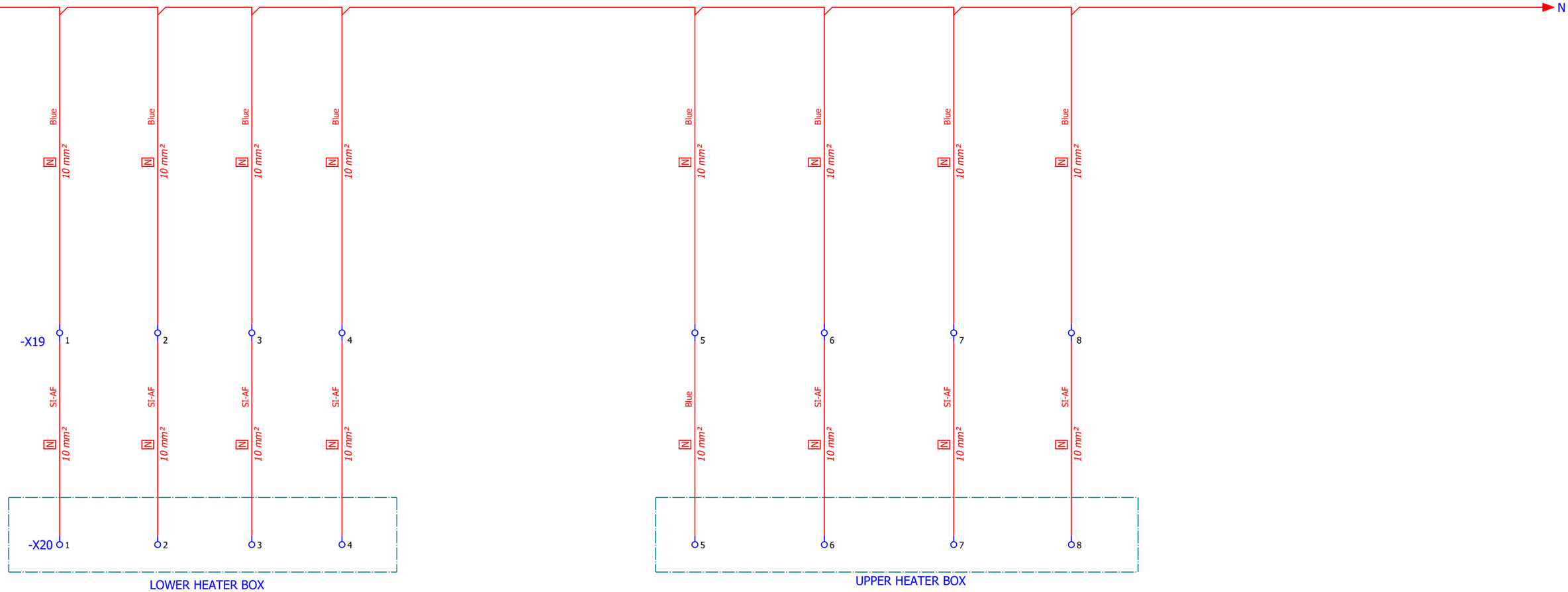

N / 160

Project Version	v0.1	Author	OĞULCAN YILMAZ	GT FORM	**Güven Teknik Makina ve Kalıp Ind.Trade.Co.Ltd** Kavaklı Mah. Pamukova Sok. No:6 Silivri/İstanbul/Turkey +90 212 485 09 67 info@guventeknikmakina.com	**DEVIRMELI**	HEATERS NEUTRAL
Last Update	23/01/2026	Revision					Page : 7 /40

TC1
NX-TC3405
MODULE 1

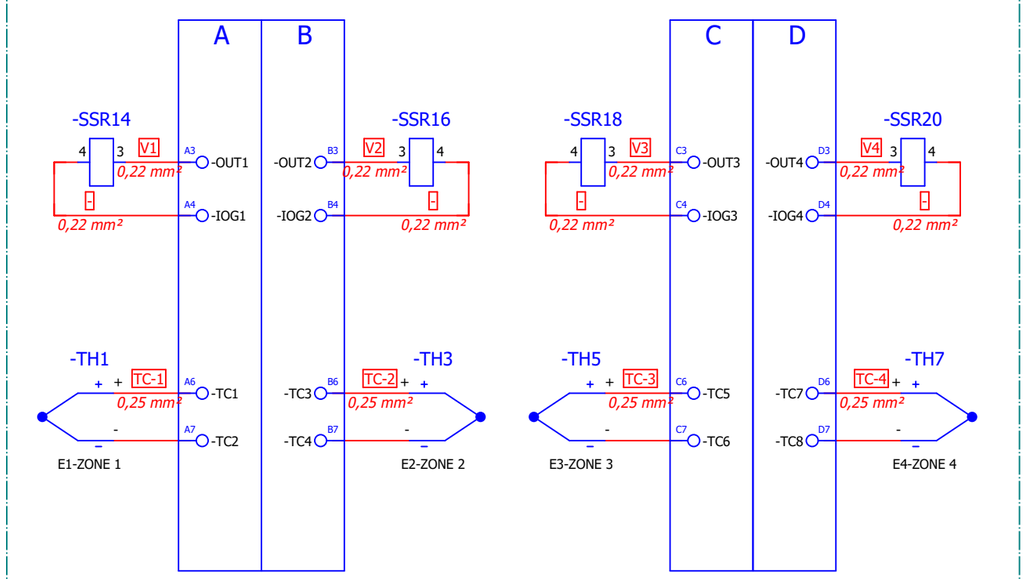

TC2
NX-TC3405
MODULE 2

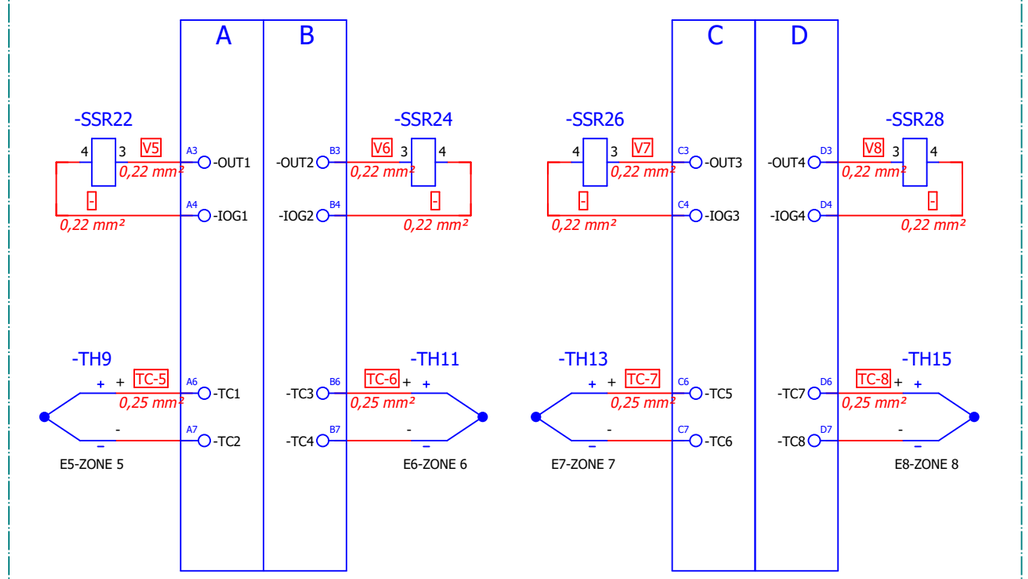

TC3
NX-TC3405
MODULE 3

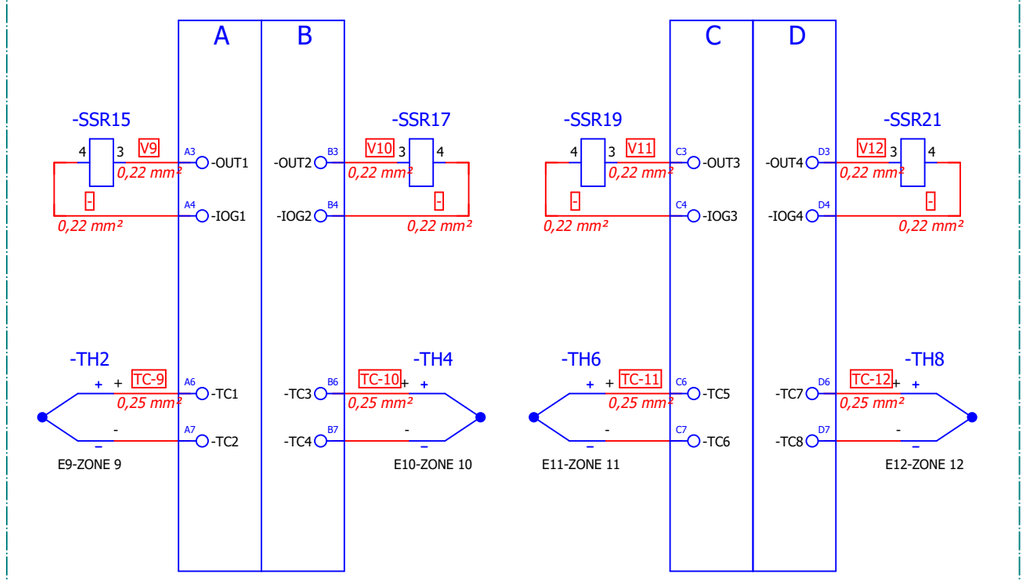

TC4
NX-TC3405
MODULE 4

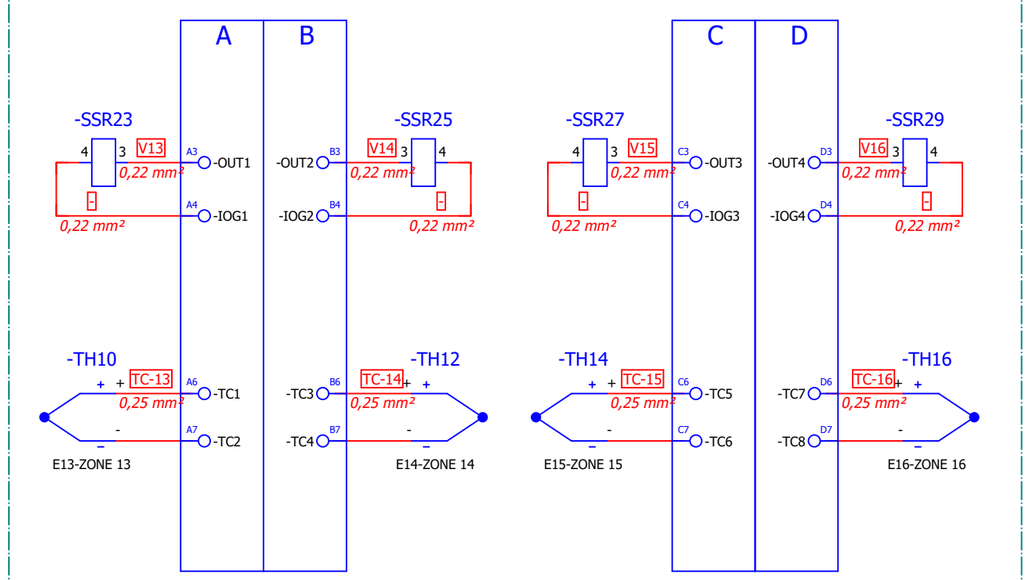

Project Version	v0.1	Author	OĞULCAN YILMAZ	GT FORM	**Güven Teknik Makina ve Kalıp Ind.Trade.Co.Ltd** Kavaklı Mah. Pamukova Sok. No:6 Silivri/İstanbul/Turkey +90 212 485 09 67 info@guventeknikmakina.com	**DEVIRMELI**	TEMPERATURE CONTROL-1
Last Update	23/01/2026	Revision					Page : 8 /40

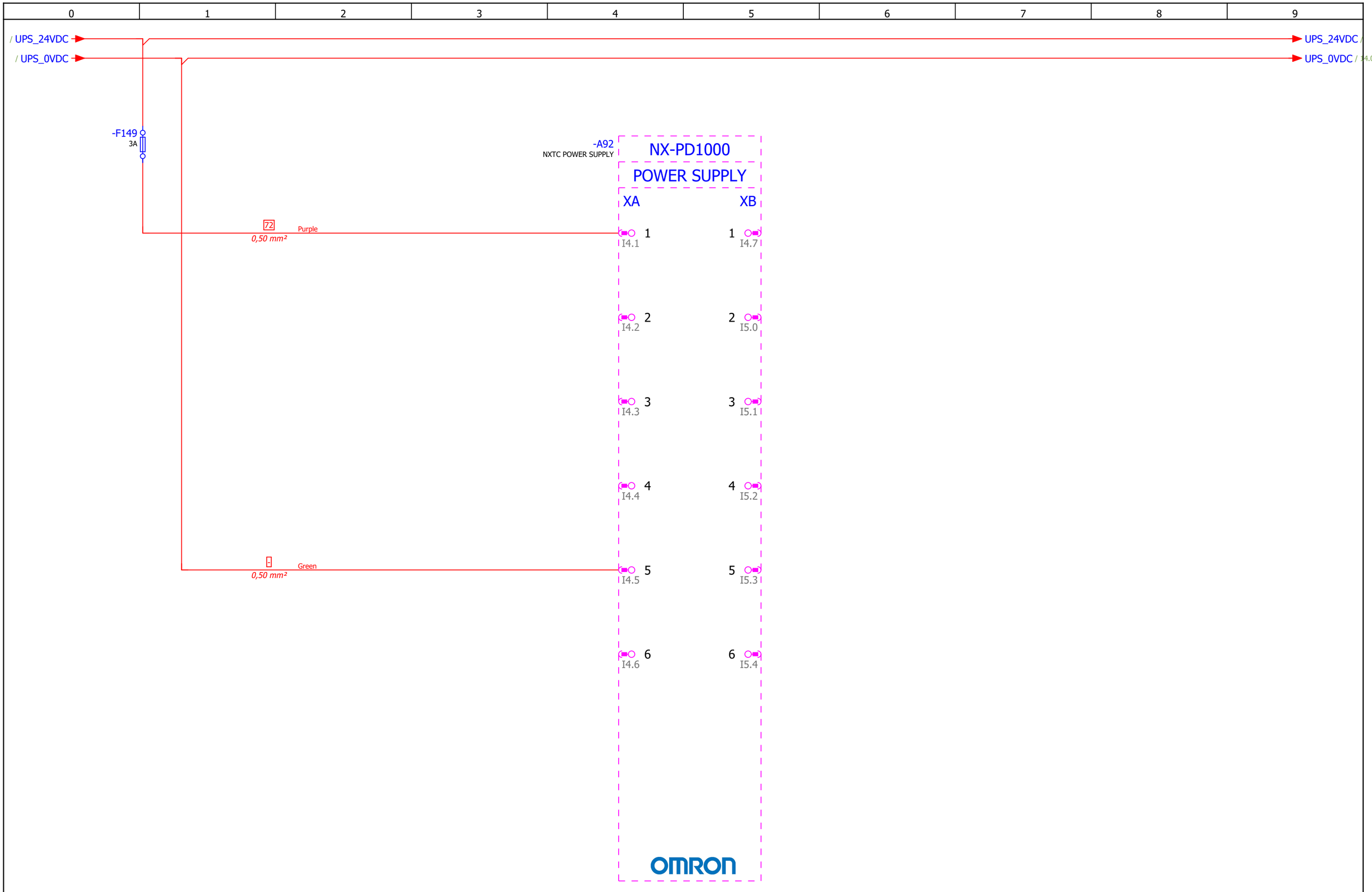

Project Version	v0.1	Author	OĞULCAN YILMAZ	GT FORM	**Güven Teknik Makina ve Kalıp Ind.Trade.Co.Ltd** Kavaklı Mah. Pamukova Sok. No:6 Silivri/İstanbul/Turkey +90 212 485 09 67 info@guventeknikmakina.com	**DEVIRMELI**	PD1000
Last Update	23/01/2026	Revision					Page : 9 /40

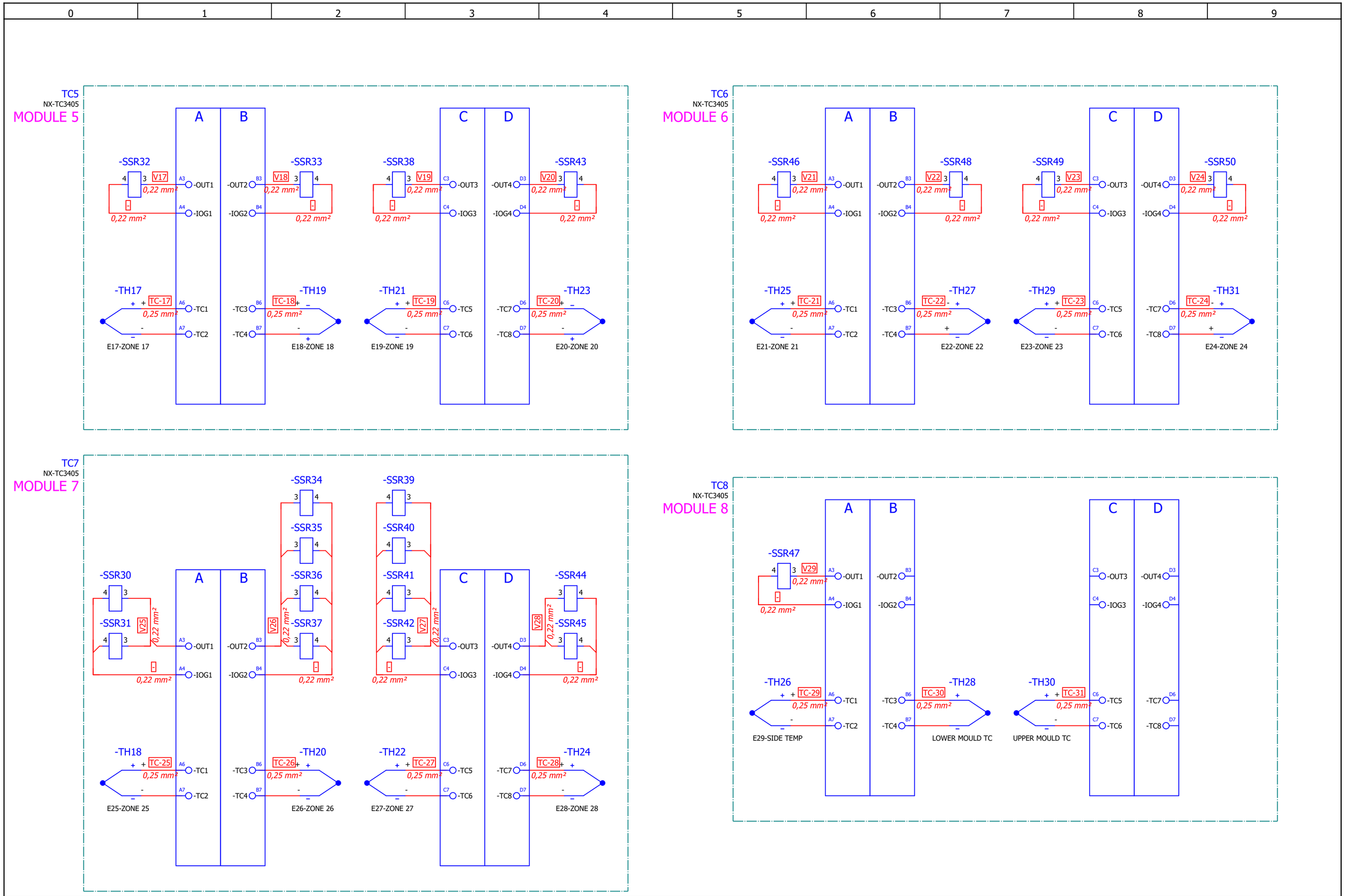

Project Version	v0.1	Author	OĞULCAN YILMAZ	GT FORM	**Güven Teknik Makina ve Kalıp Ind.Trade.Co.Ltd** Kavaklı Mah. Pamukova Sok. No:6 Silivri/İstanbul/Turkey +90 212 485 09 67 info@guventeknikmakina.com	**DEVIRMELI**	TEMPERATURE CONTROL-2
Last Update	23/01/2026	Revision					Page : 10 /40

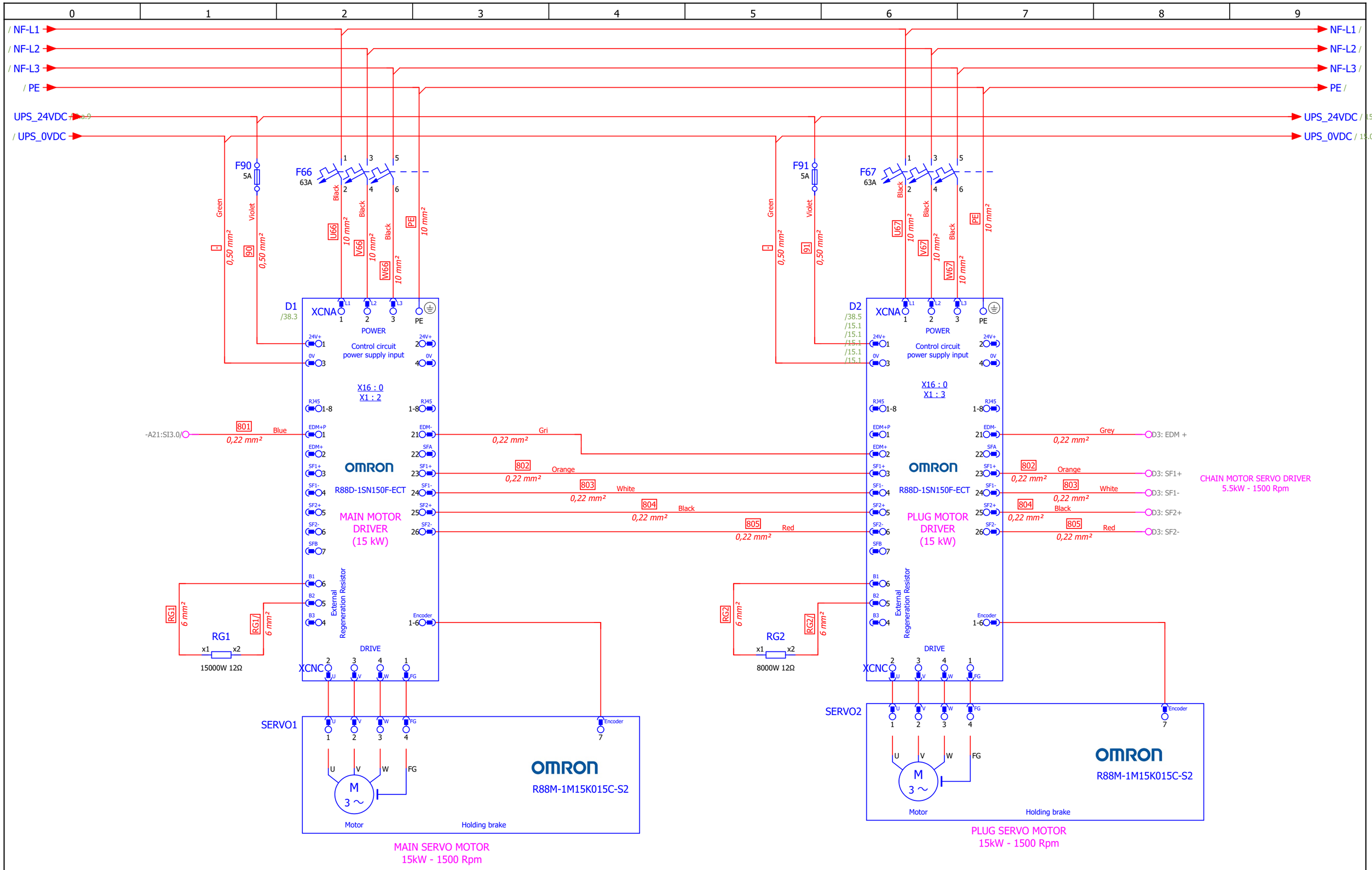

Project Version	v0.1	Author	OĞULCAN YILMAZ	GT FORM	**Güven Teknik Makina ve Kalıp Ind.Trade.Co.Ltd** Kavaklı Mah. Pamukova Sok. No:6 Silivri/İstanbul/Turkey +90 212 485 09 67 info@guventeknikmakina.com	**DEVIRMELI**	SERVO -1
Last Update	23/01/2026	Revision					Page : 11 /40

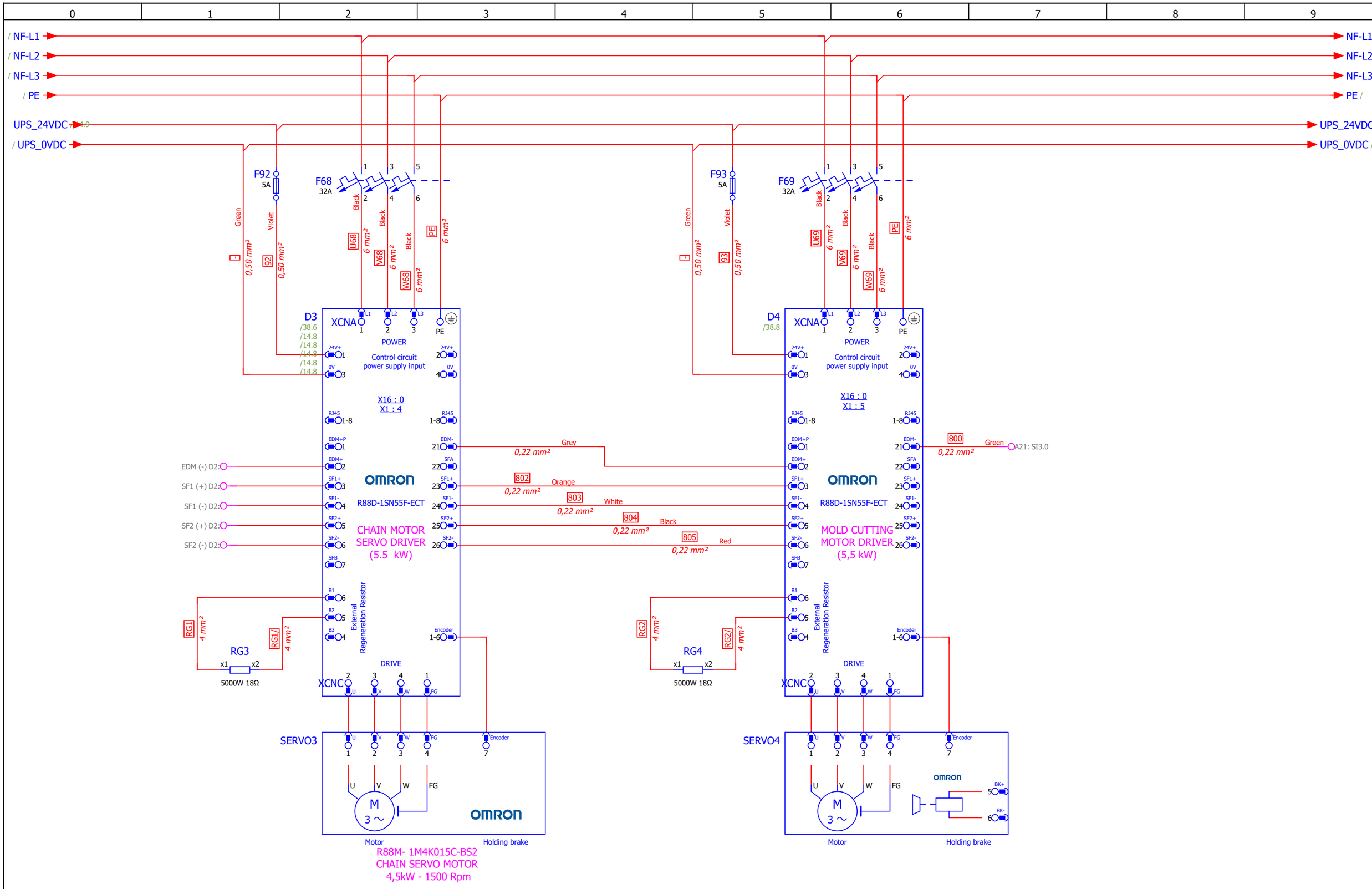

Project Version	v0.1	Author	OĞULCAN YILMAZ	GT FORM	**Güven Teknik Makina ve Kalıp Ind.Trade.Co.Ltd** Kavaklı Mah. Pamukova Sok. No:6 Silivri/İstanbul/Turkey +90 212 485 09 67 info@guventeknikmakina.com	**DEVIRMELI**	SERVO -2
Last Update	23/01/2026	Revision					Page : 12 /40

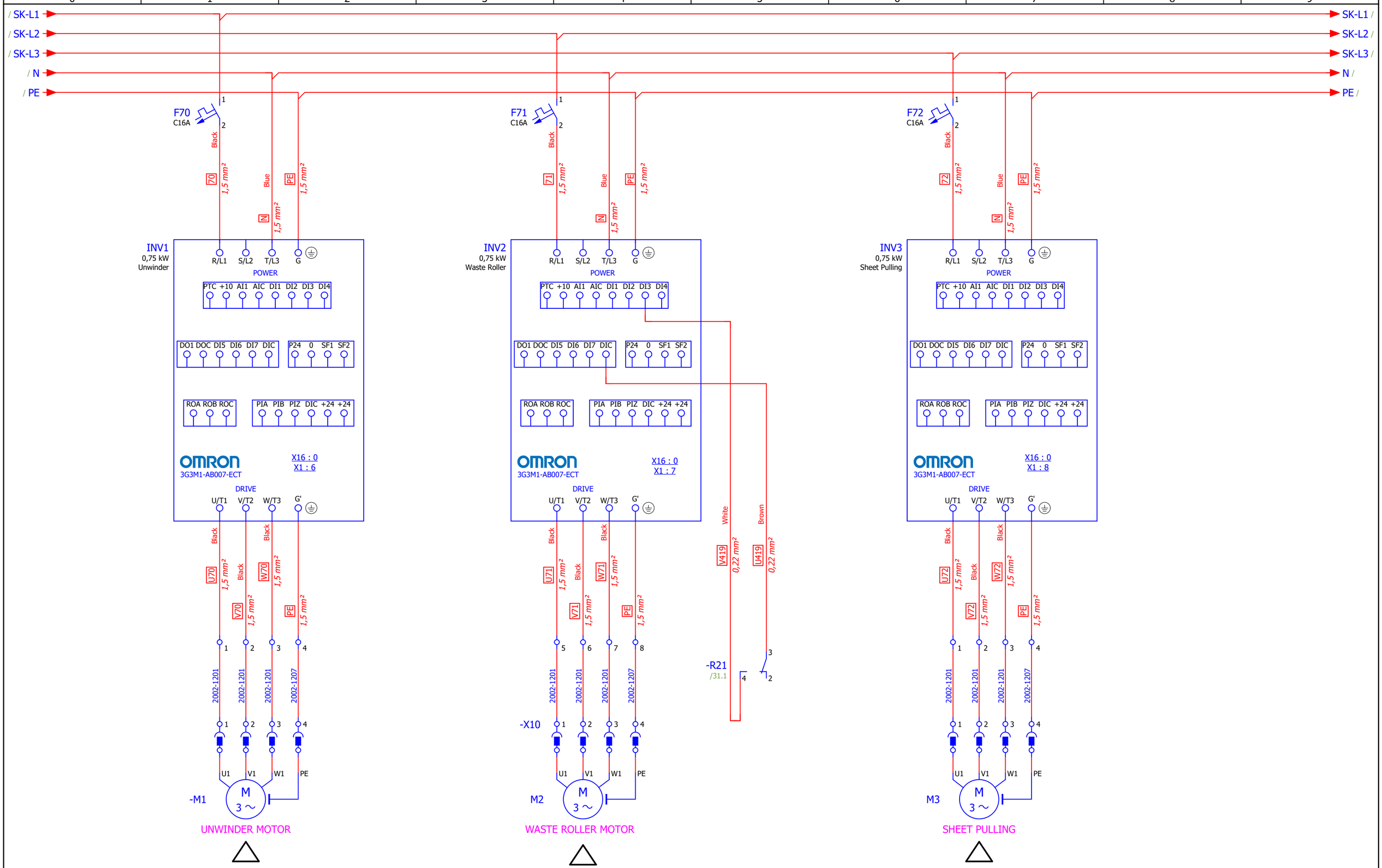

Project Version	v0.1	Author	OĞULCAN YILMAZ	GT FORM	**Güven Teknik Makina ve Kalıp Ind.Trade.Co.Ltd** Kavaklı Mah. Pamukova Sok. No:6 Silivri/İstanbul/Turkey +90 212 485 09 67 info@guventeknikmakina.com	**DEVIRMELI**	FREQUENCY INVERTER -1
Last Update	23/01/2026	Revision					Page : 13 /40

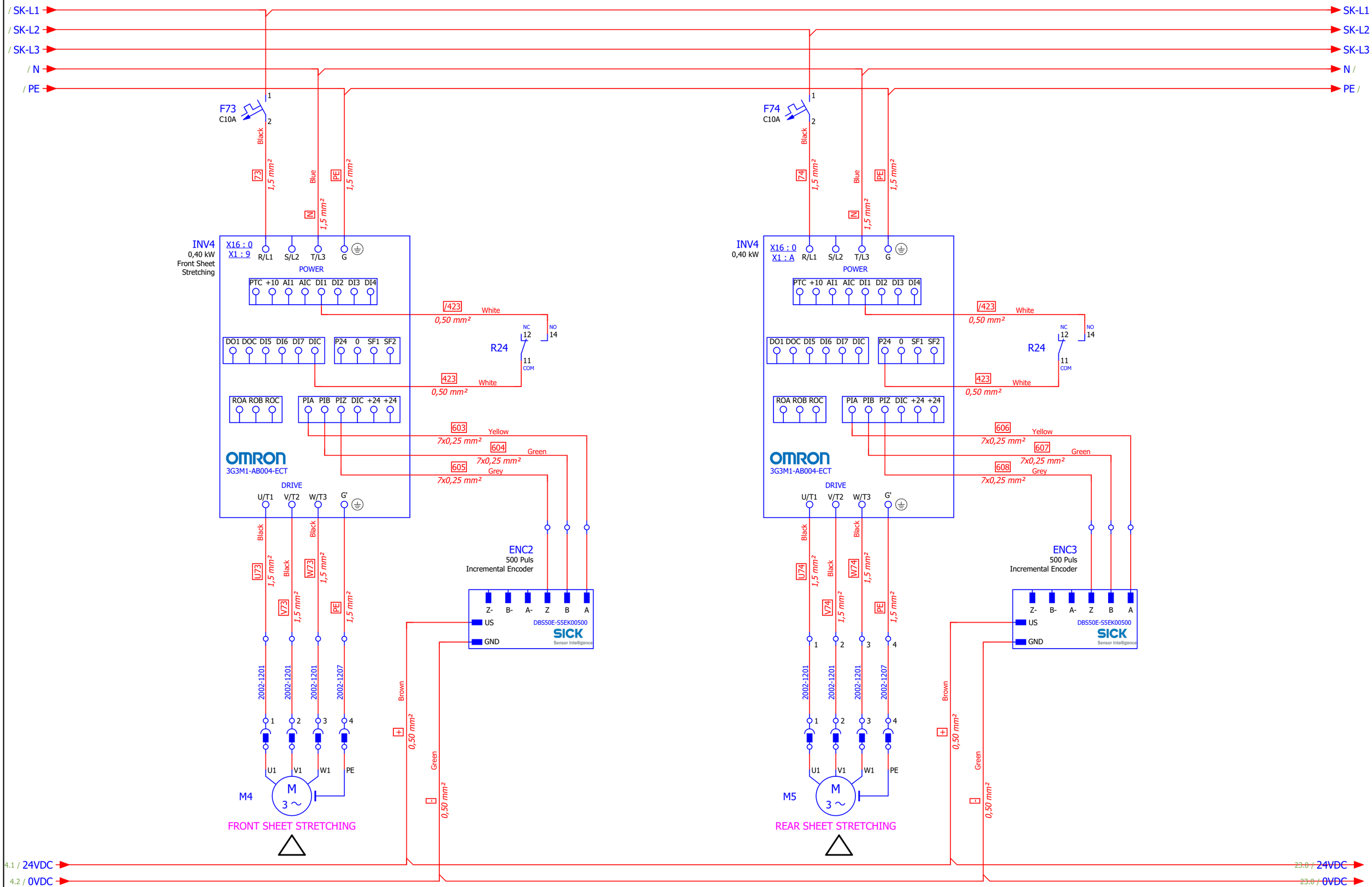

Project Version	v0.1	Author	OĞULCAN YILMAZ	GT FORM	**Güven Teknik Makina ve Kalıp Ind.Trade.Co.Ltd** Kavaklı Mah. Pamukova Sok. No:6 Silivri/İstanbul/Turkey +90 212 485 09 67 info@guventeknikmakina.com	**DEVIRMELI**	FREQUENCY INVERTER -2
Last Update	23/01/2026	Revision					Page : 14 /40

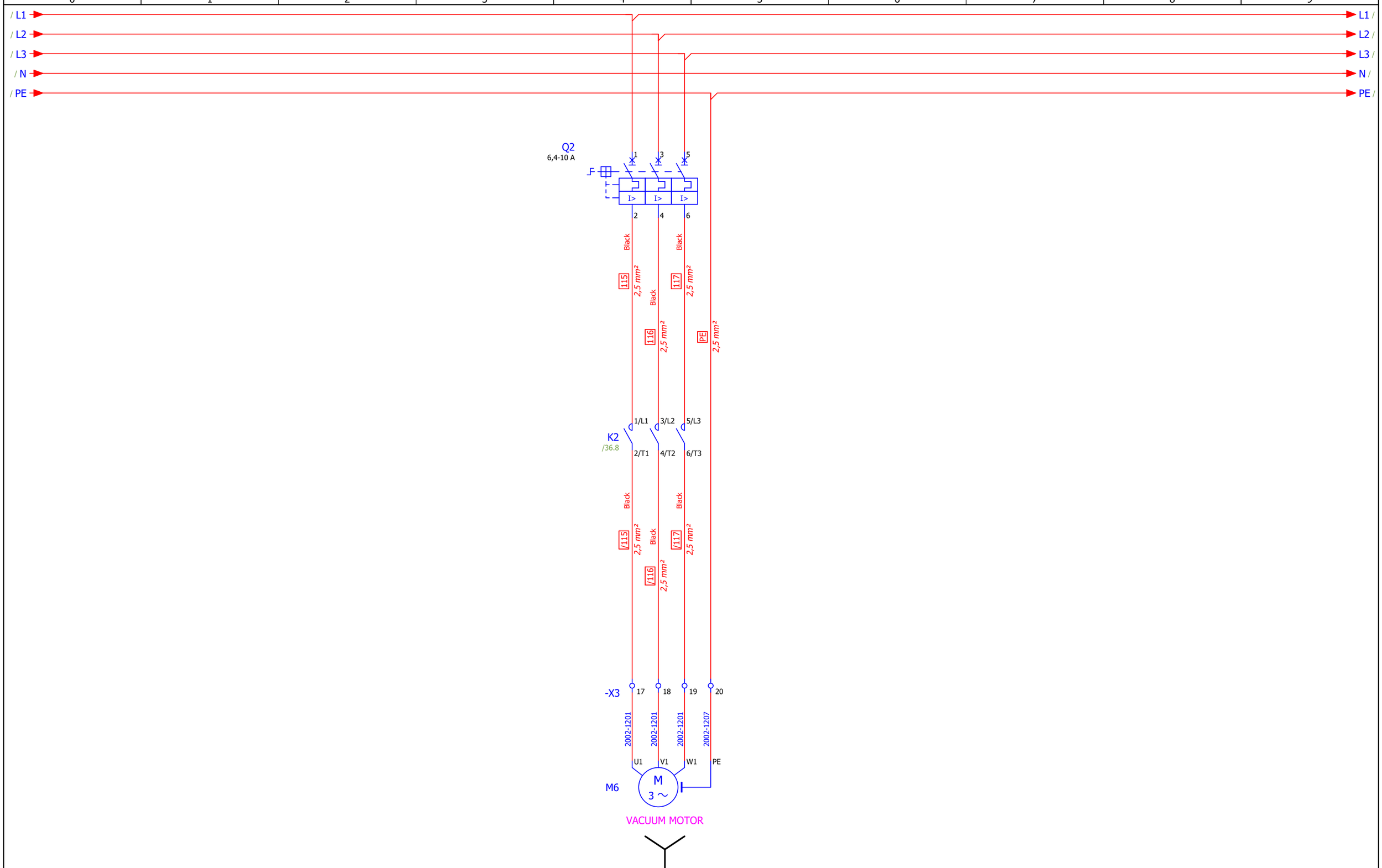

Project Version	v0.1	Author	OĞULCAN YILMAZ	GT FORM	**Güven Teknik Makina ve Kalıp Ind.Trade.Co.Ltd** Kavaklı Mah. Pamukova Sok. No:6 Silivri/İstanbul/Turkey +90 212 485 09 67 info@guventeknikmakina.com	**DEVIRMELI**	AC MOTORS
Last Update	23/01/2026	Revision					Page : 15 /40

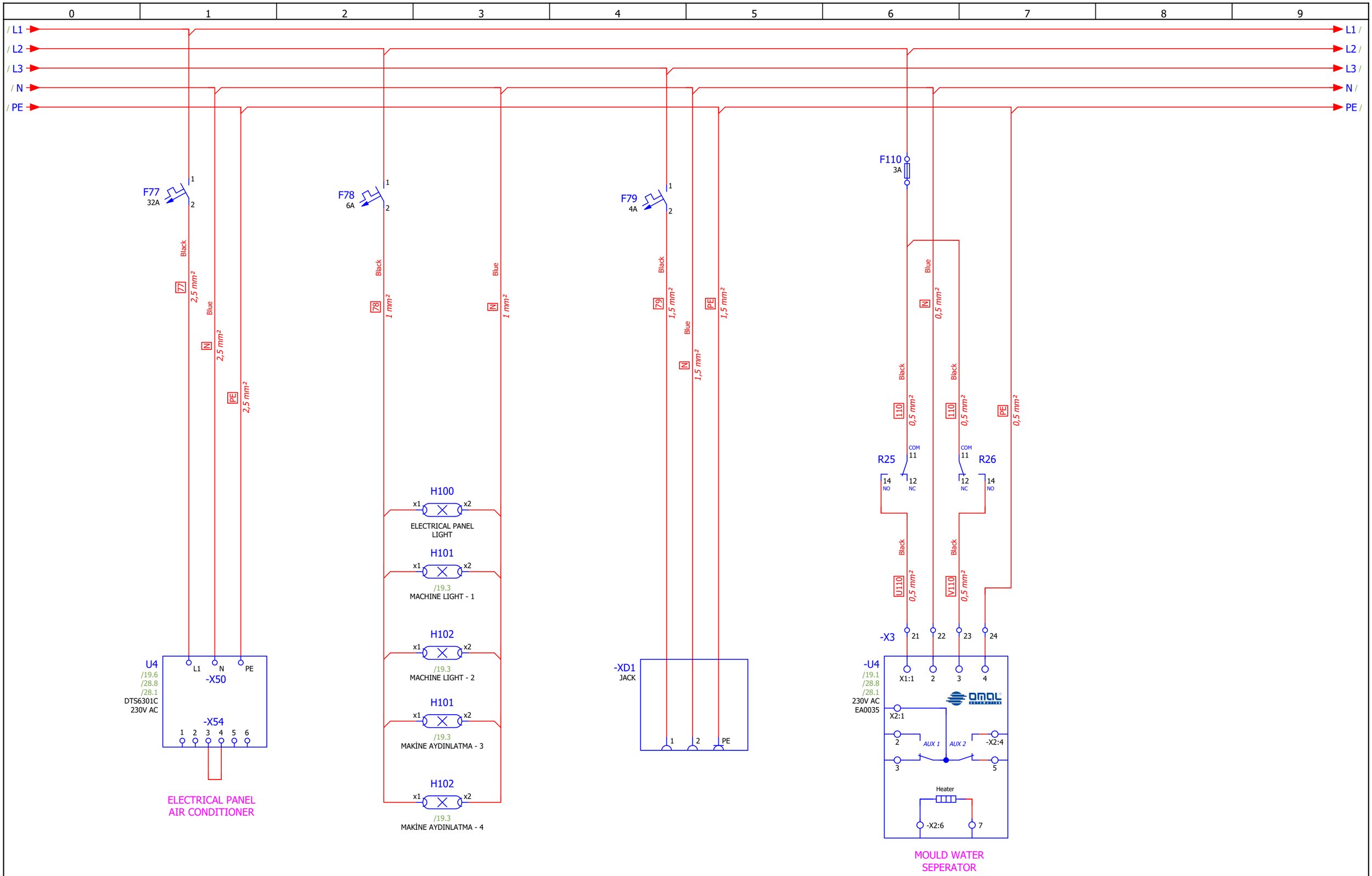

Project Version	v0.1	Author	OĞULCAN YILMAZ	GT FORM	**Güven Teknik Makina ve Kalıp Ind.Trade.Co.Ltd** Kavaklı Mah. Pamukova Sok. No:6 Silivri/İstanbul/Turkey +90 212 485 09 67 info@guventeknikmakina.com	**DEVIRMELI**	AC DEVICES-1
Last Update	23/01/2026	Revision					Page : 16 /40

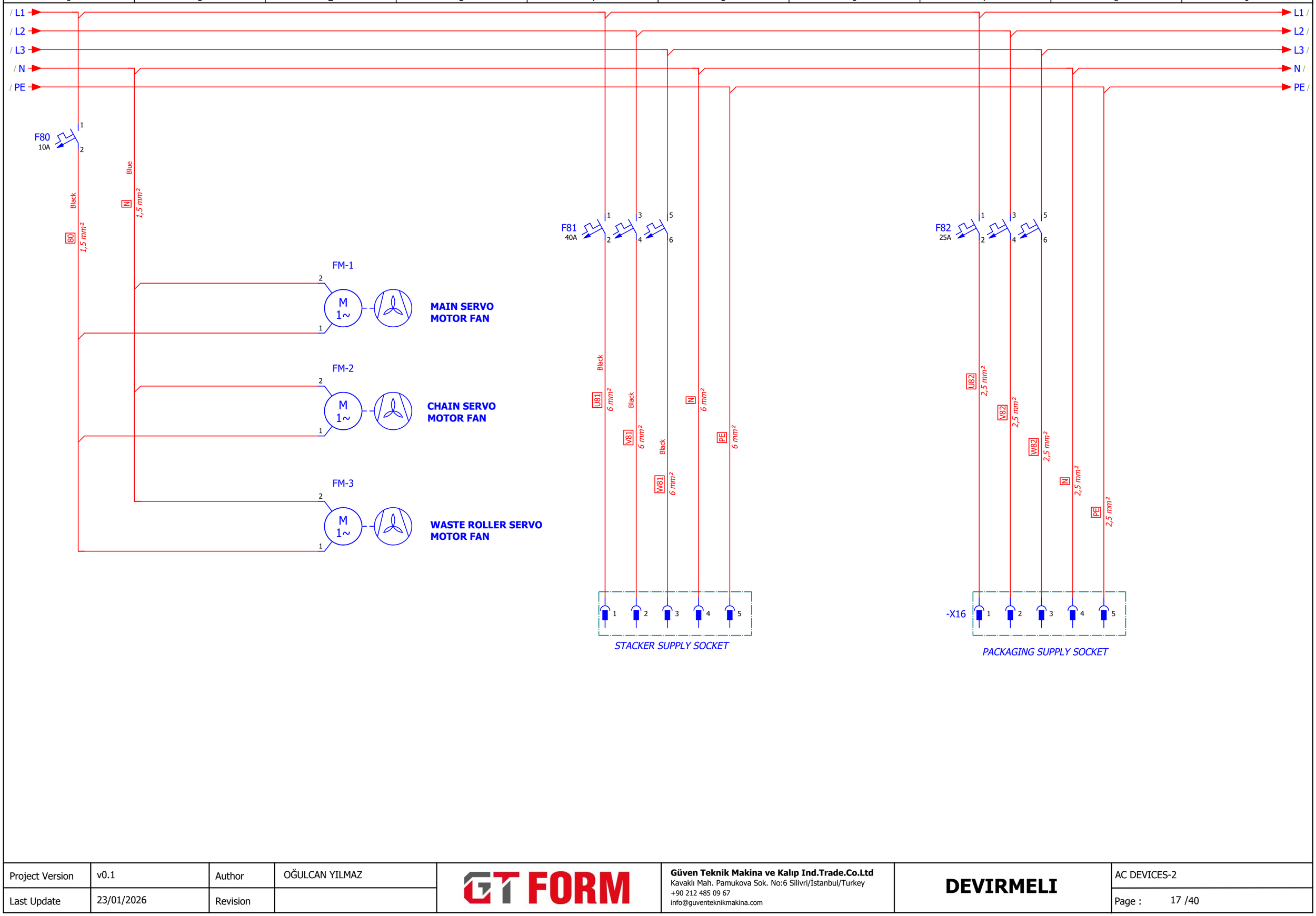

Project Version	v0.1	Author	OĞULCAN YILMAZ	GT FORM	**Güven Teknik Makina ve Kalıp Ind.Trade.Co.Ltd** Kavaklı Mah. Pamukova Sok. No:6 Silivri/İstanbul/Turkey +90 212 485 09 67 info@guventeknikmakina.com	**DEVIRMELI**	AC DEVICES-2
Last Update	23/01/2026	Revision					Page : 17 /40

15.9 / UPS_24VDC
/ UPS_0VDC

UPS_24VDC / 22.0
UPS_0VDC / 22.0

F95 5A
F96 5A

95 Violet 0,50 mm²
- Green 0,50 mm²

96 Violet 0,50 mm²
- Green 0,50 mm²

-A1
24 VDC, 60 W max.
PLC POWER SUPPLY
XPS + - GR
Power supply
OMRON
NJ-PD3001
RUN output
XPS R1 R2

-A2
/38.0
PLC
XUSB USB 1-4
Peripheral USB
DIP Switch ON OFF 1 2 3 4
SD Memory Card
OMRON
NJ301-1200
EtherNet/IP
EtherCAT
XETH1 1-8 RJ-45
XETH2 1-8 RJ-45

-A4
/22.0
/38.2
24VDC, 1,25 W max.
GİRİŞ/ÇIKIŞ
ANA MODÜL
XA 1 3
Unit power supply
(24 VDC)
OMRON
NX-ECC203
X10 : 0
X1 : 6
DIP switch ON OFF 1 2 3 4
x10
x1
I/O power supply
(5 to 24 VDC)
XA 7 GND
XB 7 GND
XA 5 IOV
XB 5 IOG
EtherCAT IN
EtherCAT OUT
XH 1-8 RJ-45
XI 1-8 RJ-45
XUSB USB 1-4
Peripheral USB

-A90
/22.3
CONTROLLER ECC203
PD1000
NX-PD1000
POWER SUPPLY
XA XB
96 Violet 0,50 mm²
1 I0.0 — 1 I0.1
2 I0.2 — 2 I0.3
3 I0.4 — 3 I0.5
4 I0.6 — 4 I0.7
5 I0.8 — 5 I0.9
6 I0.10 — 6 I0.11
OMRON

Green 0,50 mm²

LG
PE 0,50 mm²
PE 0,50 mm²
PE 0,50 mm²
PE 0,50 mm²

20.9 / PE
PE / 22.0

Project Version	v0.1	Author	OĞULCAN YILMAZ	GT FORM	**Güven Teknik Makina ve Kalıp Ind.Trade.Co.Ltd** Kavaklı Mah. Pamukova Sok. No:6 Silivri/İstanbul/Turkey +90 212 485 09 67 info@guventeknikmakina.com	**DEVIRMELI**	DC DEVICES-1
Last Update	23/01/2026	Revision					Page : 18 /40

UPS_24VDC
UPS_0VDC
21.9 / PE

UPS_24VDC / 24.5
UPS_0VDC / 24.5
PE / 22.0

F97
3A

F98
3A

-A90
/21.8
NXTC POWER SUPPLY

NX-PD1000
POWER SUPPLY

XA XB

1 I0.0 — 1 I0.1
2 I0.2 — 2 I0.3
3 I0.4 — 3 I0.5
4 I0.6 — 4 I0.7
5 I0.8 — 5 I0.9
6 I0.10 — 6 I0.11

Violet 97 0,50 mm²
Green 0,50 mm²

Violet 98 0,50 mm²
Green 0,50 mm²
PE 0,50 mm²

-A4
/21.3
/38.2
24VDC, 1,25 W max.
TEMPERATURE MODULE

XA 1 3
Unit power supply
(24 VDC)

XUSB USB 1-4
Peripheral USB

x10
x1

DIP switch
ON
OFF
1 2 3 4
SWITCH 4 (ADRESS +100) :ON

OMRON
NX-ECC203
NODE ADRESS : 100
X10 : 0
X1 : 0

EtherCAT IN
EtherCAT OUT

I/O power supply
(5 to 24 VDC)

XA 7 GND
XB 7 GND
XA 5 IOV
XB 5 IOG
XH 1-8 RJ-45
XI 1-8 RJ-45

PE 0,50 mm²
PE 0,50 mm²

Ethernet Hub
U8
/38.3

X1 1 PWR+
2 PWR-
PE 3

PWR

852-111

1 2 3 4 5 PE

22.9 / PE
PE / 23.0

Project Version	v0.1	Author	OĞULCAN YILMAZ	GT FORM	**Güven Teknik Makina ve Kalıp Ind.Trade.Co.Ltd** Kavaklı Mah. Pamukova Sok. No:6 Silivri/İstanbul/Turkey +90 212 485 09 67 info@guventeknikmakina.com	**DEVIRMELI**	DC DEVICES-2
Last Update	23/01/2026	Revision					Page : 19 /40

/ 24VDC
/ 0VDC
22.9 / PE

24VDC / 23
0VDC / 23.0
PE / 24.0

F99
3A

F100
3A

F101
3A

Violet
99
0,50 mm²
Green
-
0,50 mm²
PE
0,50 mm²

Violet
100
0,50 mm²
Green
-
0,50 mm²
PE
0,50 mm²

Violet
101
0,50 mm²
Green
-
0,50 mm²
PE
0,50 mm²

Secomea

U9
/38.3

3 +12-24V in
2 GND
1 PE
4 +5V out
8 Output 2
5 GND
9 Output 1a
10 Output 1b
ETH1 DEV1
ETH2 UPLINK1
ANT1
6 Input 2
7 Input 1
COM DB9
USB1
USB2

EtherCat Hub
U10
/38.0
ETHERCAT HUB 1

+24V DC
0V
FG
OMRON
GX-JC03
LAN Port
1-8 XIN RJ-45
LAN Port
1-8 X2 RJ-45
LAN Port
1-8 X3 RJ-45

EtherCat Hub
U11
ETHERCAT HUB 2

+24V DC
0V
FG
OMRON
GX-JC03
LAN Port
1-8 XIN RJ-45
LAN Port
1-8 X2 RJ-45
LAN Port
1-8 X3 RJ-45

Project Version	v0.1	Author	OĞULCAN YILMAZ	GT FORM	**Güven Teknik Makina ve Kalıp Ind.Trade.Co.Ltd** Kavaklı Mah. Pamukova Sok. No:6 Silivri/İstanbul/Turkey +90 212 485 09 67 info@guventeknikmakina.com	**DEVIRMELI**	DC DEVICES-3
Last Update	23/01/2026	Revision					Page : 20 /40

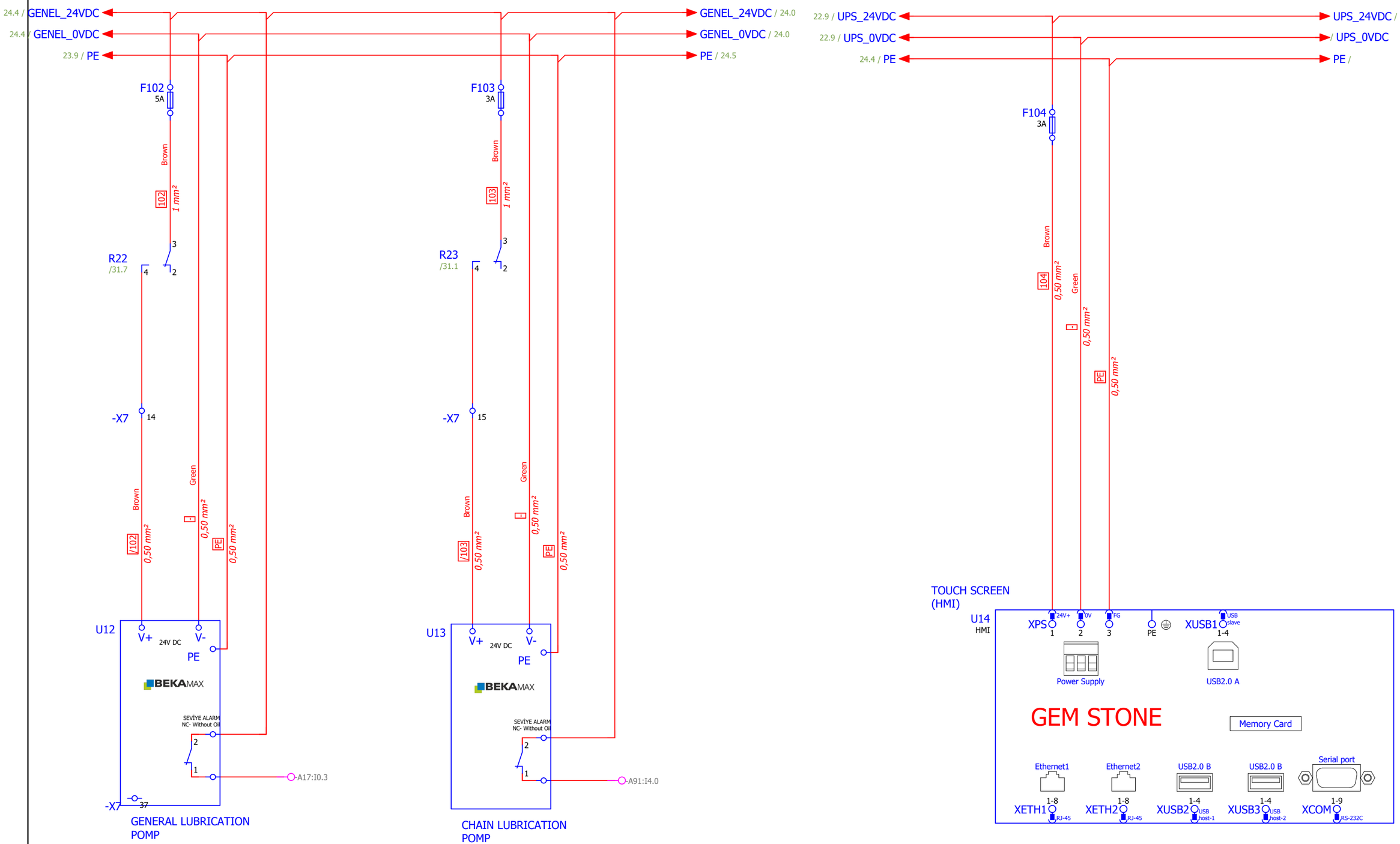

Project Version	v0.1	Author	OĞULCAN YILMAZ	GT FORM	**Güven Teknik Makina ve Kalıp Ind.Trade.Co.Ltd** Kavaklı Mah. Pamukova Sok. No:6 Silivri/İstanbul/Turkey +90 212 485 09 67 info@guventeknikmakina.com	**DEVIRMELI**	DC DEVICES-4
Last Update	23/01/2026	Revision					Page : 21 /40

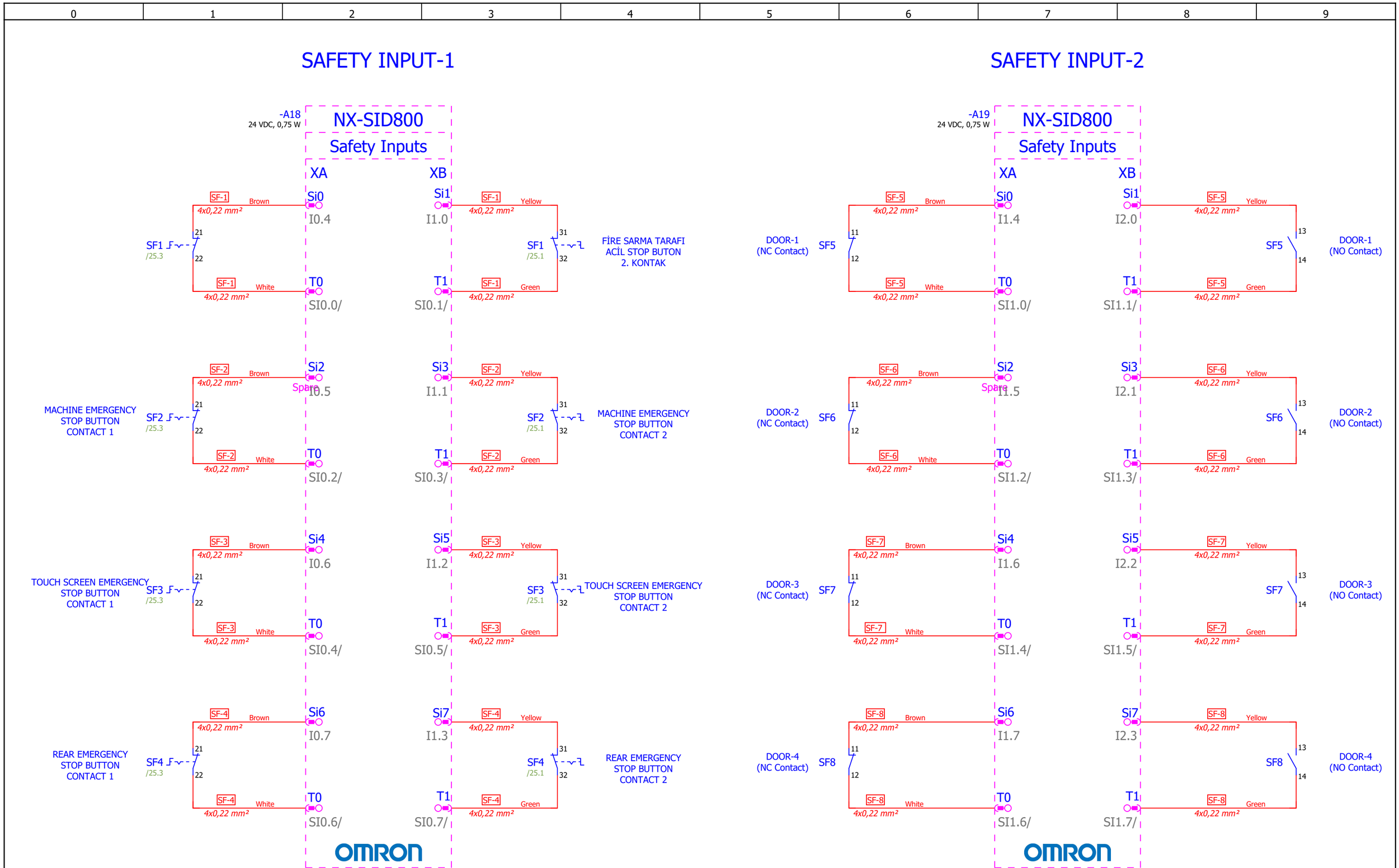

Project Version	v0.1	Author	OĞULCAN YILMAZ	GT FORM	**Güven Teknik Makina ve Kalıp Ind.Trade.Co.Ltd** Kavaklı Mah. Pamukova Sok. No:6 Silivri/İstanbul/Turkey +90 212 485 09 67 info@guventeknikmakina.com	**DEVIRMELI**	SAFETY-1
Last Update	23/01/2026	Revision					Page : 22 /40

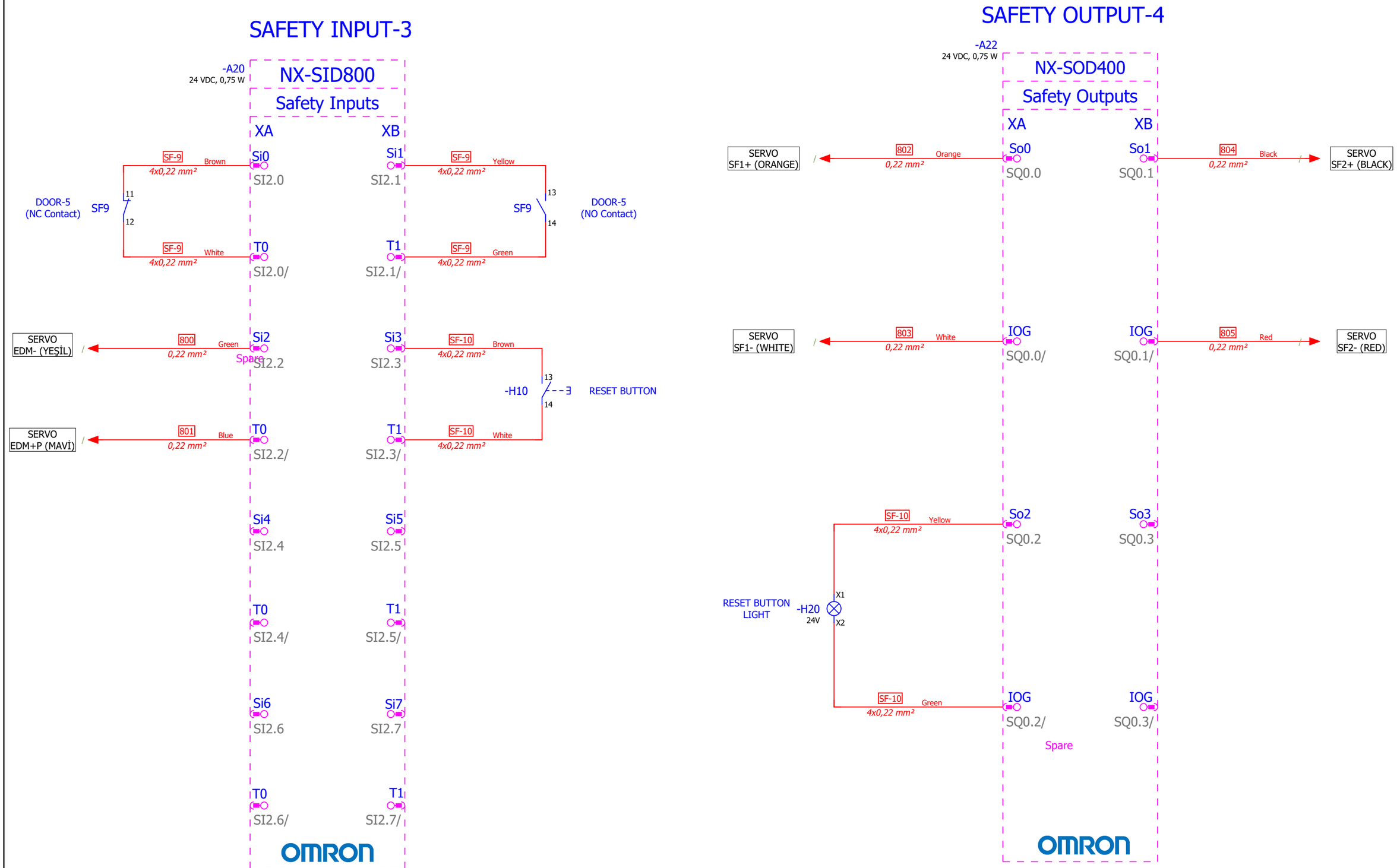

Project Version	v0.1	Author	OĞULCAN YILMAZ	GT FORM	**Güven Teknik Makina ve Kalıp Ind.Trade.Co.Ltd** Kavaklı Mah. Pamukova Sok. No:6 Silivri/İstanbul/Turkey +90 212 485 09 67 info@guventeknikmakina.com	**DEVIRMELI**	SAFETY-2
Last Update	23/01/2026	Revision					Page : 23 /40

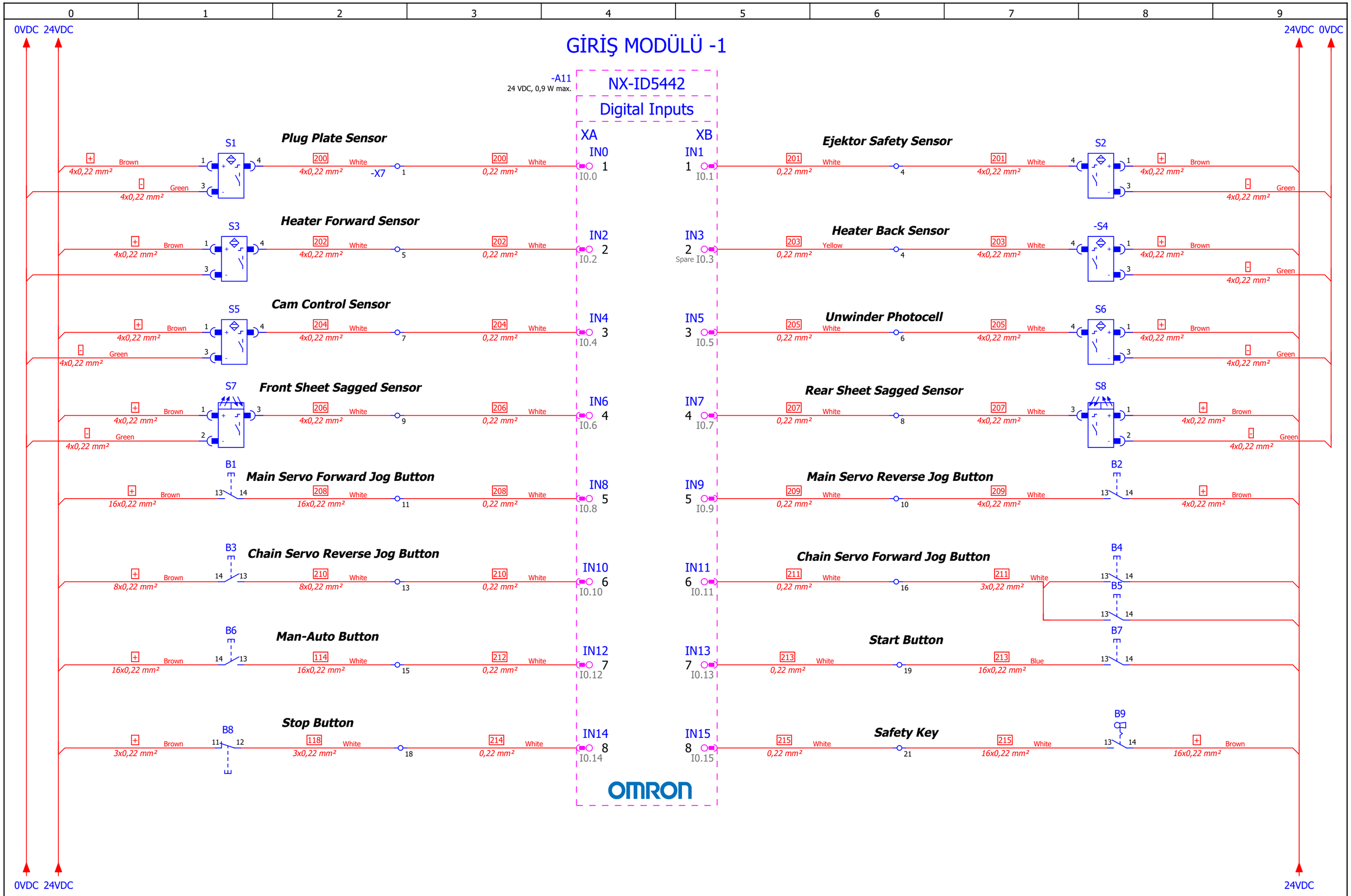

Project Version	v0.1	Author	OĞULCAN YILMAZ	GT FORM	**Güven Teknik Makina ve Kalıp Ind.Trade.Co.Ltd** Kavaklı Mah. Pamukova Sok. No:6 Silivri/İstanbul/Turkey +90 212 485 09 67 info@guventeknikmakina.com	**DEVIRMELI**	INPUTS-1
Last Update	23/01/2026	Revision					Page : 24 /40

INPUT-2

0VDC 24VDC

24VDC 0VDC

-A28
24 VDC, 0,9 W max.

NX-ID5442

Digital Inputs

XA

XB

IN0 1 I1.0

IN1 1 I1.1

IN2 2 I1.2

IN3 2 Spare I1.3

IN4 3 I1.4

IN5 3 I1.5

IN6 4 I1.6

IN7 4 I1.7

IN8 5 I1.8

IN9 5 I1.9

IN10 6 I1.10

IN11 6 I1.11

IN12 7 I1.12

IN13 7 I1.13

IN14 8 I1.14

IN15 8 I1.15

OMRON

Waste Roller On/Off Button

B10 14 13

B11 14 13

+ Brown 16x0,22 mm²

+ Brown 8x0,22 mm²

216 White 3x0,22 mm²

216 White 0,22 mm²

Unwinder Jog Button

B12 13 14

217 White 0,22 mm²

217 Yellow 8x0,22 mm²

+ Brown 8x0,22 mm²

Unwinder On/Off Button

B13 14 13

+ Brown 8x0,22 mm²

218 White 8x0,22 mm²

218 White 0,22 mm²

Mould Water Separator Signal 1

219 White 0,22 mm²

135 White 4x0,22 mm² → U4:

Mould Water Separator Signal 2

-U4: → 220 Pink 0,50 mm²

220 White 0,22 mm²

Plug Home Switch

S9 13 14

221 White 0,22 mm²

221 White 3x0,22 mm²

+ Brown 3x0,22 mm²

General Lubrication Low Level Alarm

-U30: 1 → 222 White 3x0,22 mm²

222 White 0,22 mm²

Chain Lubrication Low Level Alarm

223 White 0,22 mm²

223 White 3x0,22 mm² → 1 U31:

General Lubrication Center Switch

S10 14 13

+ Brown 3x0,22 mm²

224 White 3x0,22 mm²

224 White 0,22 mm²

Front Sheet Stretching Limit Switch

S11 11 12

225 White 0,22 mm²

225 White 3x0,22 mm²

+ Brown 3x0,22 mm²

Rear Sheet Stretching Limit Switch

S12 12 11

+ Brown 3x0,22 mm²

226 White 3x0,22 mm²

226 White 0,22 mm²

General Lubrication High Pressure Switch

S13 11 12

227 White 0,22 mm²

227 White 3x0,22 mm²

+ Brown 3x0,22 mm²

Upper Cutting Up Limit Switch

S14 12 11

+ Brown 3x0,22 mm²

228 White 3x0,22 mm²

228 White 0,22 mm²

Upper Cutting Down Limit Switch

S15 11 12

229 White 0,22 mm²

229 White 3x0,22 mm²

+ Brown 3x0,22 mm²

Main Motor Jog Allow

B14 14 13

+ Brown 3x0,22 mm²

230 White 3x0,22 mm²

230 White 16x0,22 mm²

Sheet Pulling Sensor

S16 3 1 2

231 White 0,50 mm²

231 White 3x0,22 mm²

White 3x0,22 mm²

Brown 0,50 mm²

Green 0,50 mm²

0VDC 24VDC

24VDC 0VDC

Project Version	v0.1	Author	OĞULCAN YILMAZ	GT FORM	**Güven Teknik Makina ve Kalıp Ind.Trade.Co.Ltd** Kavaklı Mah. Pamukova Sok. No:6 Silivri/İstanbul/Turkey +90 212 485 09 67 info@guventeknikmakina.com	**DEVIRMELI**	INPUTS-2
Last Update	23/01/2026	Revision					Page : 25 /40

0 | 1 | 2 | 3 | 4 | 5 | 6 | 7 | 8 | 9

0VDC 24VDC

24VDC 0VDC

INPUT-3

-A30
24 VDC, 0,9 W max.

NX-ID5442

Digital Inputs

XA XB

Vacuum Motor Protection Alarm

+ Brown 0,50 mm² | Q2 13 14 | 232 Orange 0,50 mm² | 0,22 Orange 16x0,22 mm² → IN0 1 I3.0

Voltage is High

IN1 1 I3.1 ← 235 Brown/Yellow 0,22 mm² | 235 White 0,50 mm² | R27 13 14 /31.1 | + Brown 0,50 mm²

Voltage is Low

+ Brown 0,50 mm² | R28 13 14 /31.7 | 236 White 0,50 mm² | 236 White 0,22 mm² → IN2 2 I3.2

Sheet Pulling Piston

IN3 2 Spare I3.3 ← 237 White 0,50 mm² | Brown 3x0,22 mm² | B15 4 3 | Violet 0,50 mm²

General 24v Check

238 White 0,22 mm² | 238 White 0,22 mm² → IN4 3 I3.4

IN5 3 I3.5 → EMPTY

EMPTY → IN6 4 I3.6

IN7 4 I3.7 → EMPTY

EMPTY → IN8 5 I3.8

IN9 5 I3.9 → EMPTY

EMPTY → IN10 6 I3.10

IN11 6 I3.11 → EMPTY

EMPTY → IN12 7 I3.12

IN13 7 I3.13 → EMPTY

EMPTY → IN14 8 I3.14

IN15 8 I3.15 → EMPTY

OMRON

0VDC 24VDC

24VDC 0VDC

Project Version	v0.1	Author	OĞULCAN YILMAZ	GT FORM	**Güven Teknik Makina ve Kalıp Ind.Trade.Co.Ltd** Kavaklı Mah. Pamukova Sok. No:6 Silivri/İstanbul/Turkey +90 212 485 09 67 info@guventeknikmakina.com	**DEVIRMELI**	INPUTS-3
Last Update	23/01/2026	Revision					Page : 26 /40

OUTPUTS-1

-A32
24 VDC, 1,1 W max.

NX-OD5256
digital outputs

0VDC

Main Motor Brake Relay
R1
- Green 0,50 mm² — A2 A1 — 300 Brown 16x0,22 mm² — OUT0 1 Q0.0
2 Poles

Plug Motor Brake Relay
R2
OUT1 1 Q0.1 — 301 White 16x0,22 mm² — A1 A2 — - Green 0,50 mm²
2 Poles

Cutting Motor Brake Relay
R3
- Green 0,50 mm² — A2 A1 — 302 Green 16x0,22 mm² — OUT2 2 Q0.2
2 Poles

Main Air Valve
R4
OUT3 2 Q0.3 — 303 Yellow 16x0,22 mm² — A1 A2 — - Green 0,50 mm²
2 Poles

Heater Valve
R5
- Green 0,50 mm² — A2 A1 — 304 Gray 16x0,22 mm² — OUT4 3 Q0.4
2 Poles

Support Piston Air Valve
R6
OUT5 3 Q0.5 — 305 Pink 16x0,22 mm² — A1 A2 — - Green 0,50 mm²
2 Poles

Press Valve
R7
- Green 0,50 mm² — A2 A1 — 306 Red 16x0,22 mm² — OUT6 4 Q0.6
2 Poles

Bottom Forming Air Valve
R8
OUT7 4 Q0.7 — 307 Blue 16x0,22 mm² — A1 A2 — - Green 0,50 mm²
2 Poles

Vacuum Valve
R9
- Green 0,50 mm² — A2 A1 — 308 Violet 16x0,22 mm² — OUT8 5 Q0.8
2 Poles

Forming Air Valve
R10
OUT9 5 Q0.9 — 309 Black 16x0,22 mm² — A1 A2 — - Green 0,50 mm²
2 Poles

Blowing Valve
R11
- Green 0,50 mm² — A2 A1 — 310 Gray/Pink 16x0,22 mm² — OUT10 6 Q0.10
2 Poles

Chain Arm Open Valve
R12
OUT11 6 Q0.11 — 311 Red/Blue 16x0,22 mm² — A1 A2 — - Green 0,50 mm²
2 Poles

Ejector Valve
R13
- Green 0,50 mm² — A2 A1 — 312 Brown/Green 16x0,22 mm² — OUT12 7 Q0.12
2 Poles

Water Valve
R14
OUT13 7 Q0.13 — 313 Brown/Yellow 16x0,22 mm² — A1 A2 — - Green 0,50 mm²
2 Poles

Vacuum Motor Start Relay
-R15
- Green 0,50 mm² — A2 A1 — 314 White/Green 16x0,22 mm² — OUT14 8 Q0.14
2 Poles

Spare

Alarm Relay
R16
Spare — OUT15 8 Q0.15 — 315 White/Yellow 16x0,22 mm² — A1 A2 — - Green 0,50 mm²
2 Poles

OMRON

0VDC

Project Version	v0.1	Author	OĞULCAN YILMAZ	GT FORM	**Güven Teknik Makina ve Kalıp Ind.Trade.Co.Ltd** Kavaklı Mah. Pamukova Sok. No:6 Silivri/İstanbul/Turkey +90 212 485 09 67 info@guventeknikmakina.com	**DEVIRMELI**	OUTPUTS-1
Last Update	23/01/2026	Revision					Page : 27 /40

OUTPUT-2

-A33
24 VDC, 1,1 W max.

NX-OD5256
digital outputs

0VDC

Start Rölesi(Tepe Lamba-Yeşil)
R17
- Green 0,50 mm² — A2 A1 — 316 Brown 16x0,22 mm²
2 Poles
OUT0 1 Q1.0

Buzzer
R19
- Green 0,50 mm² — A2 A1 — 318 Green 16x0,22 mm²
2 Poles
OUT2 2 Q1.2

General Lubrication Start Relay
R21
- Green 0,50 mm² — A2 A1 — 320 Gray 16x0,22 mm²
2 Poles
OUT4 3 Q1.4

Front&Rear Sheet Stertching Calibrations Relay
R23
- Green 0,50 mm² — A2 A1 — 322 Red 16x0,22 mm²
2 Poles
OUT6 4 Q1.6

Water Separator Bottom Direction
R25
- Green 0,50 mm² — A2 A1 — 324 Violet 16x0,22 mm²
2 Poles
OUT8 5 Q1.8

High Voltage
R27
- Green 0,50 mm² — A2 A1 — 326 Gray/Pink 16x0,22 mm²
2 Poles
OUT10 6 Q1.10

Spare Output-2
R29
- Green 0,50 mm² — A2 A1 — 328 Brown/Green 16x0,22 mm²
2 Poles
OUT12 7 Q1.12

Spare Output- 4
R31
- Green 0,50 mm² — A2 A1 — 330 White/Green 16x0,22 mm²
2 Poles
OUT14 Spare 8 Q1.14

OUT1 1 Q1.1

Warning Relay
R18
317 White 16x0,22 mm² — A1 A2 — - Green 0,50 mm²
2 Poles

Waste Roller Button Lamp / Torque
R20
319 Yellow 16x0,22 mm² — A1 A2 — - Green 0,50 mm²
2 Poles

OUT3 2 Q1.3

Chain Lubrication Start Relay
R22
321 Pink 16x0,22 mm² — A1 A2 — - Green 0,50 mm²
2 Poles

OUT5 3 Q1.5

Water Separator Top Direction
R24
323 Blue 16x0,22 mm² — A1 A2 — - Green 0,50 mm²
2 Poles

OUT7 4 Q1.7

Low Voltage
R26
325 Black 16x0,22 mm² — A1 A2 — - Green 0,50 mm²
2 Poles

OUT9 5 Q1.9

Spare Output-1
R28
327 Red/Blue 16x0,22 mm² — A1 A2 — - Green 0,50 mm²
2 Poles

OUT11 6 Q1.11

Spare Output-3
R30
329 Brown/Yellow 16x0,22 mm² — A1 A2 — - Green 0,50 mm²
2 Poles

OUT13 7 Q1.13

Spare Output-5
R32
331 White/Yellow 16x0,22 mm² — A1 A2 — - Green 0,50 mm²
2 Poles

OUT15 Spare 8 Q1.15

OMRON

0VDC

Project Version	v0.1	Author	OĞULCAN YILMAZ	GT FORM	**Güven Teknik Makina ve Kalıp Ind.Trade.Co.Ltd** Kavaklı Mah. Pamukova Sok. No:6 Silivri/İstanbul/Turkey +90 212 485 09 67 info@guventeknikmakina.com	**DEVIRMELI**	OUTPUTS-2
Last Update	23/01/2026	Revision					Page : 28 /40

0 | 1 | 2 | 3 | 4 | 5 | 6 | 7 | 8 | 9

32.0 0VDC 32.0 24VDC

Air Pressure Sensor

ANALOG INPUT -1

-TF1

PSE560-02

PSE

Data sheet(EN)

SMC

BN BU BK

CN1 1 DC(+) 2 NC 3 DC(-) 4 OUTPUT

+ Brown 3x0,22 mm²

- Green 3x0,22 mm²

500 White 3x0,22 mm²

- Green 0,50 mm²

-A93

NX-AD3604

Analog Inputs

XA		XB	
Input1+		Input2+	
PIW0	1	1	PIW4
Input1-		Input2-	
	2	2	
Input3+		Input4+	
PIW2	3	3	PIW6
Input3-		Input4-	
	4	4	Spare
AG		AG	
	5	5	
AG		AG	
	6	6	

OMRON

32.9 24VDC 32.9 0VDC

0VDC 32.0 24VDC 32.0

24VDC 32.9 0VDC 32.9

Project Version	v0.1	Author	OĞULCAN YILMAZ	GT FORM	**Güven Teknik Makina ve Kalıp Ind.Trade.Co.Ltd** Kavaklı Mah. Pamukova Sok. No:6 Silivri/İstanbul/Turkey +90 212 485 09 67 info@guventeknikmakina.com	**DEVIRMELI**	ANALOG GİRİŞ -1
Last Update	23/01/2026	Revision					Page : 29 /40

0 | 1 | 2 | 3 | 4 | 5 | 6 | 7 | 8 | 9

33.0 0VDC 33.0 24VDC

33.9 0VDC 33.9 24VDC

WATER FLOWMETER

FLOWTECH

24VDC

+ - -B- 1A+ 1 F- F+ I- I+

+ Brown *2x0,50 mm²*

\- White *2x0,50 mm²*

504 White *4x0,22 mm²*

\- Green *4x0,22 mm²*

-A94

XA 1 Input1+ PIW8 | 3 Input1- | 5 AG

XB 1 Input2+ PIW10 | 3 Input2- | 5 AG

NX-AD2208 OMRON

analog inputs

ANALOG
GİRİŞ MODÜLÜ -2

33.0 0VDC 33.0 24VDC

33.9 0VDC 33.9 24VDC

Project Version	v0.1	Author	OĞULCAN YILMAZ	GT FORM	**Güven Teknik Makina ve Kalıp Ind.Trade.Co.Ltd** Kavaklı Mah. Pamukova Sok. No:6 Silivri/İstanbul/Turkey +90 212 485 09 67 info@guventeknikmakina.com	**DEVIRMELI**	ANALOG GİRİŞ -2
Last Update	23/01/2026	Revision					Page : 30 /40

33.a.0 UPS24VDC
33.a.0 0VDC
33.a.0 24VDC

WATER SEPARATOR

-U36

TKC

DC 24V
+ -

4-20mA IN
+ -

+ Brown 4x0,22 mm²

U110 White 4x0,22 mm²

1

U110 White 0,50 mm²

\- Green 4x0,22 mm²

+ Violet 0,50 mm²

\- Green 0,50 mm²

-A95

XA 1 Input1+ PIW12
2 IOV
3 IOG

XB 1 Input2+ PIW14
2 IOV
3 IOG

NX-DA3203 OMRON

ANALOG OUTPUT

ANALOG OUTPUT

UPS24VDC 33.a.0
0VDC 33.a.0
24VDC 33.a.0

Project Version	v0.1	Author	OĞULCAN YILMAZ	GT FORM	**Güven Teknik Makina ve Kalıp Ind.Trade.Co.Ltd** Kavaklı Mah. Pamukova Sok. No:6 Silivri/İstanbul/Turkey +90 212 485 09 67 info@guventeknikmakina.com	**DEVIRMELI**	ANALOG OUTPUT
Last Update	23/01/2026	Revision					Page : 31 /40

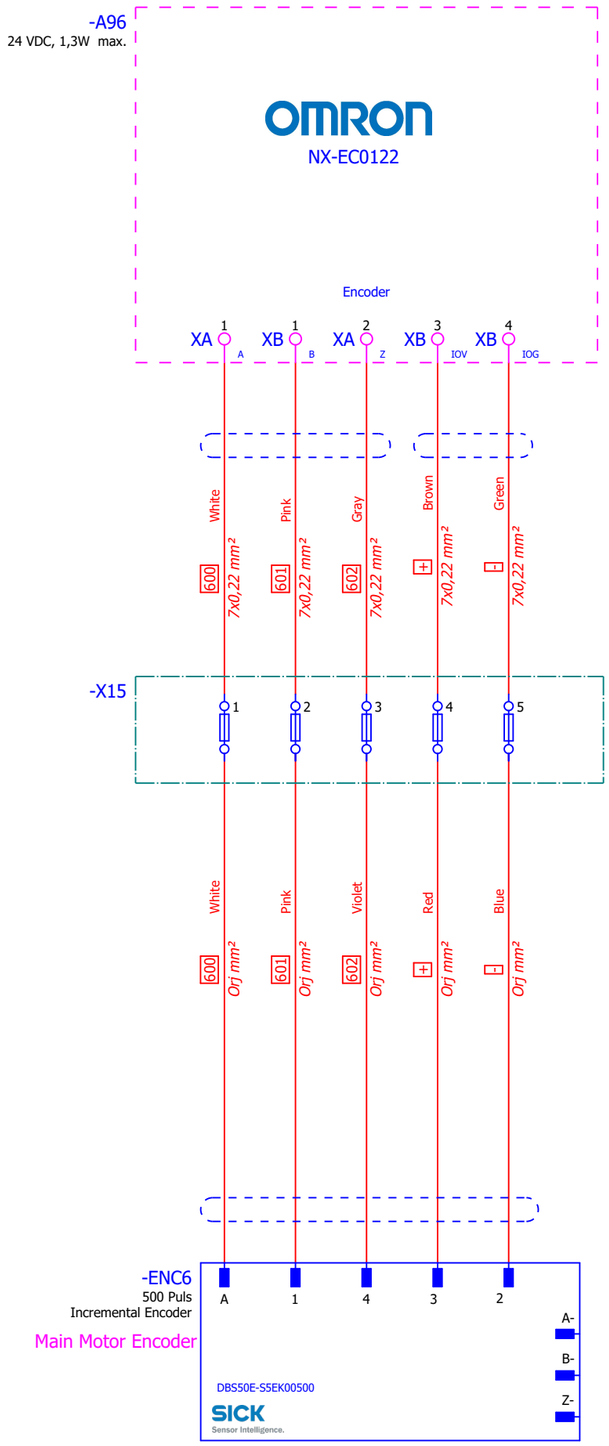

Project Version	v0.1	Author	OĞULCAN YILMAZ	GT FORM	**Güven Teknik Makina ve Kalıp Ind.Trade.Co.Ltd** Kavaklı Mah. Pamukova Sok. No:6 Silivri/İstanbul/Turkey +90 212 485 09 67 info@guventeknikmakina.com	**DEVIRMELI**	ENKODER MODÜLÜ
Last Update	23/01/2026	Revision					Page : 32 /40

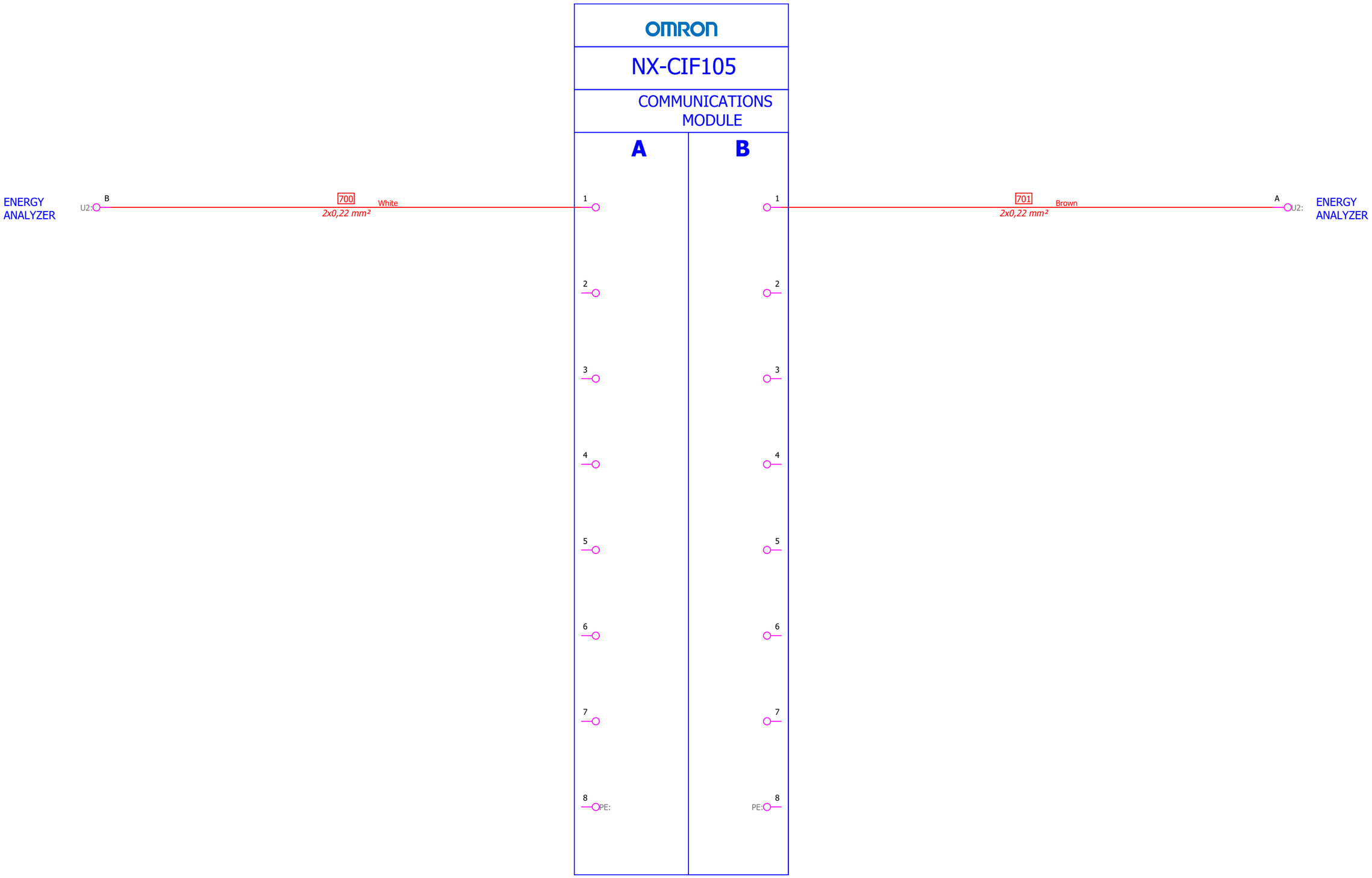
OMRON
NX-CIF105
COMMUNICATIONS MODULE
A
B
ENERGY ANALYZER
U2:
B
700
White
2x0,22 mm²
1
2
3
4
5
6
7
8
PE:
1
2
3
4
5
6
7
8
PE:
701
Brown
2x0,22 mm²
A
U2:
ENERGY ANALYZER

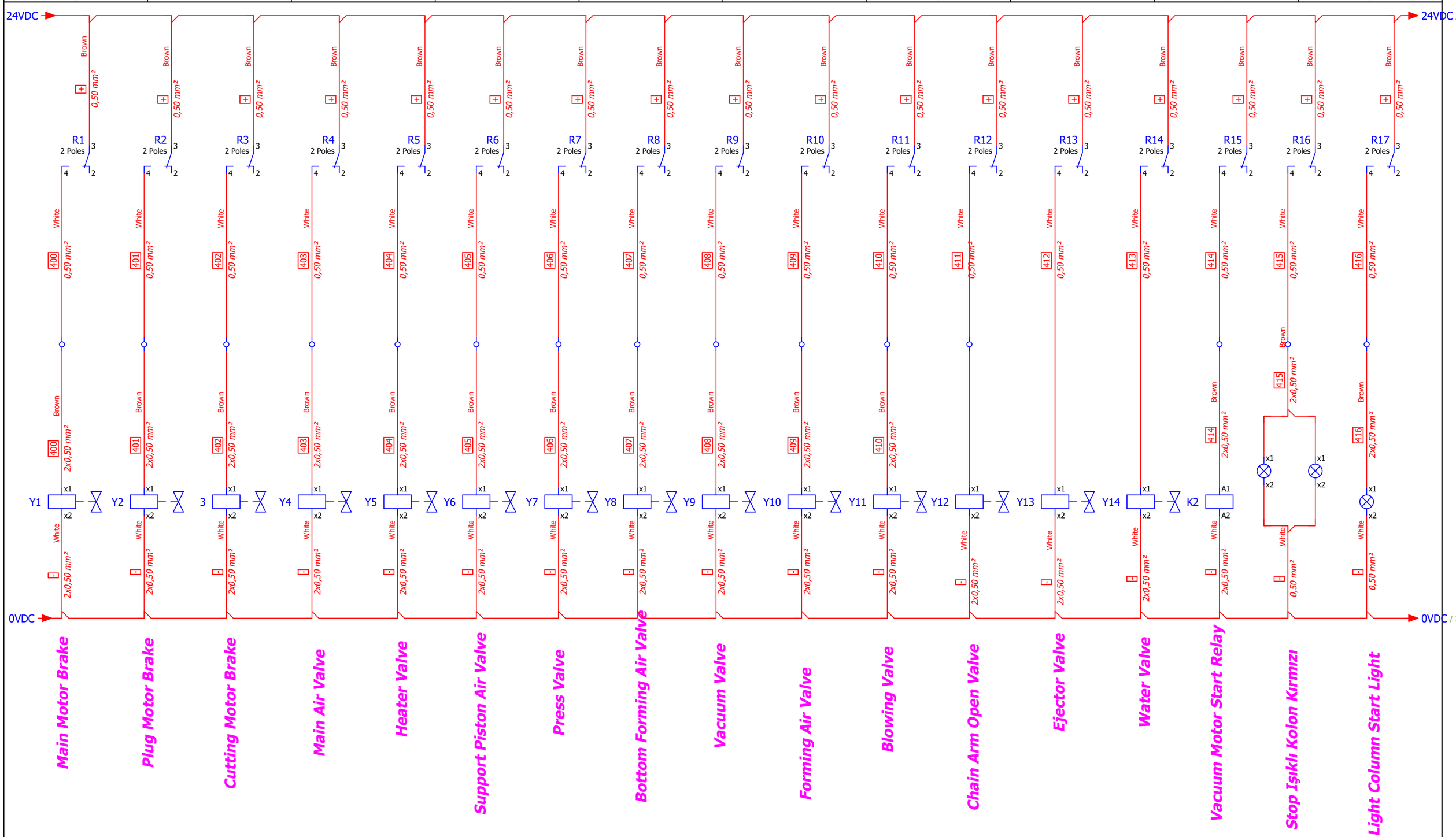

Project Version	v0.1	Author	OĞULCAN YILMAZ	GT FORM	**Güven Teknik Makina ve Kalıp Ind.Trade.Co.Ltd** Kavaklı Mah. Pamukova Sok. No:6 Silivri/İstanbul/Turkey +90 212 485 09 67 info@guventeknikmakina.com	**DEVIRMELI**	RELAY OUTPUT-1
Last Update	23/01/2026	Revision					Page : 34 /40

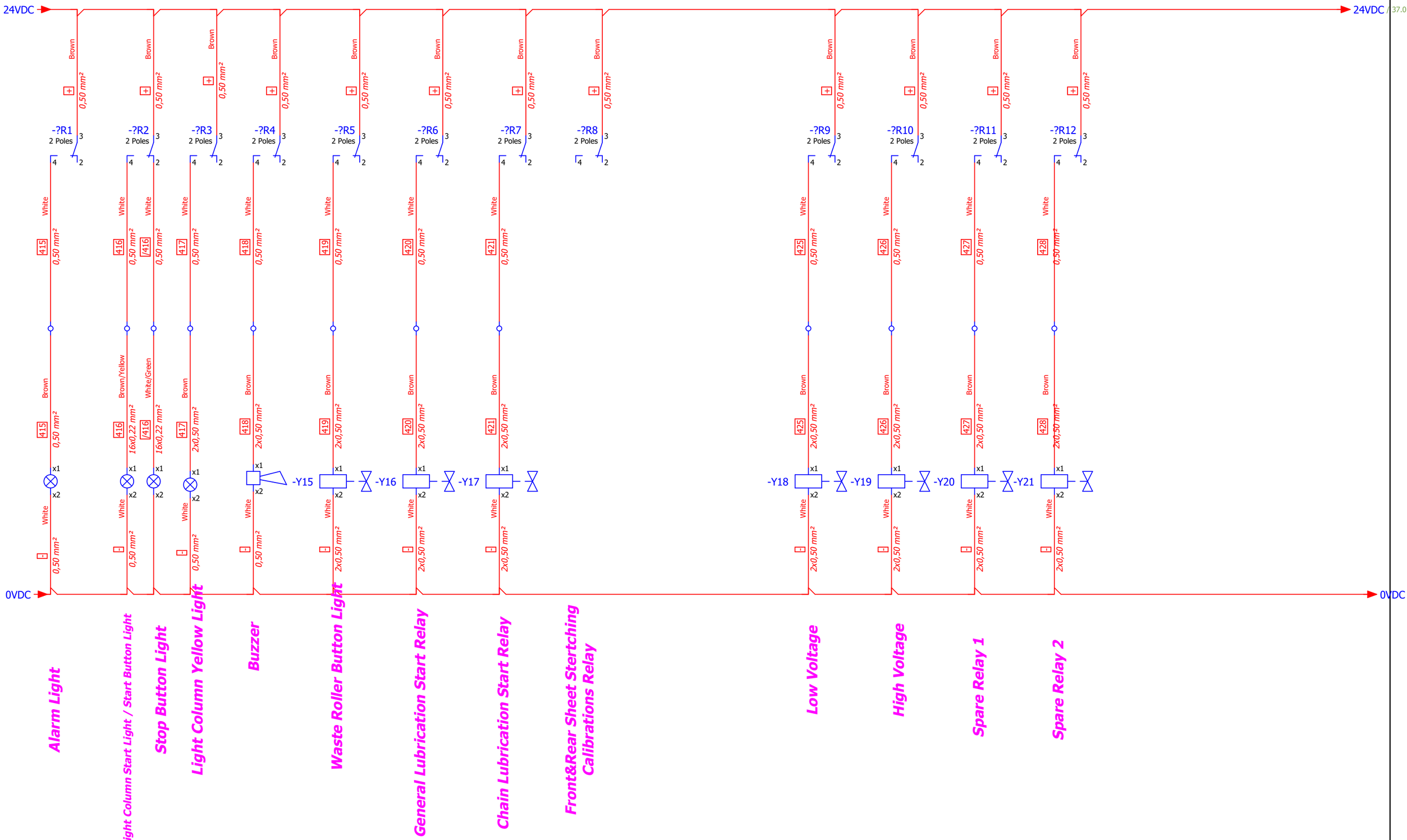

Project Version	v0.1	Author	OĞULCAN YILMAZ	GT FORM	**Güven Teknik Makina ve Kalıp Ind.Trade.Co.Ltd** Kavaklı Mah. Pamukova Sok. No:6 Silivri/İstanbul/Turkey +90 212 485 09 67 info@guventeknikmakina.com	**DEVIRMELI**	RÖLE ÇIKIŞLARI-2
Last Update	23/01/2026	Revision					Page : 35 /40

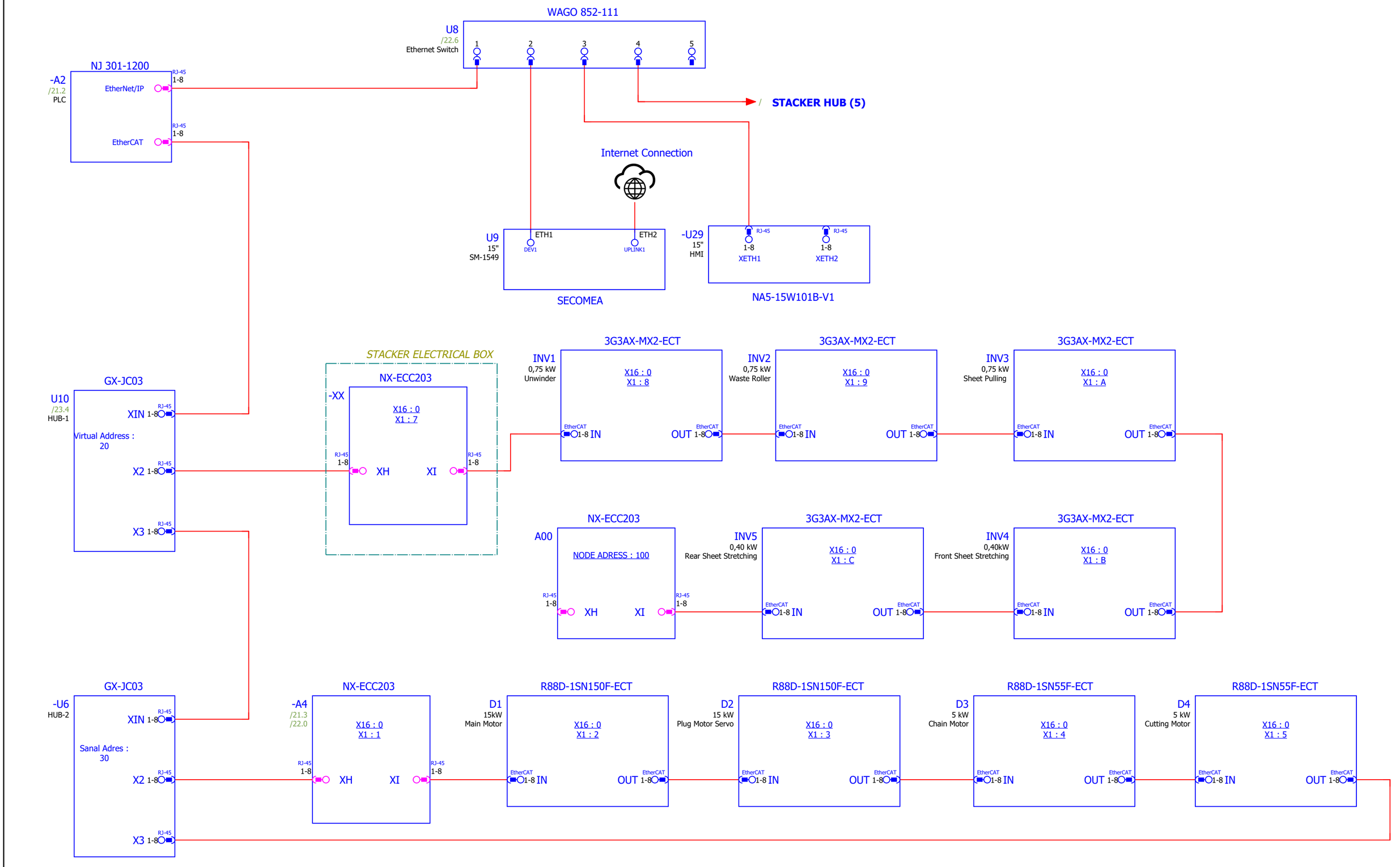

Project Version	v0.1	Author	OĞULCAN YILMAZ	GT FORM	**Güven Teknik Makina ve Kalıp Ind.Trade.Co.Ltd** Kavaklı Mah. Pamukova Sok. No:6 Silivri/İstanbul/Turkey +90 212 485 09 67 info@guventeknikmakina.com	**DEVIRMELI**	NETWORK TOPOLOGY
Last Update	23/01/2026	Revision					Page : 36 /40

Lover Mold İnner Junction Box

X30

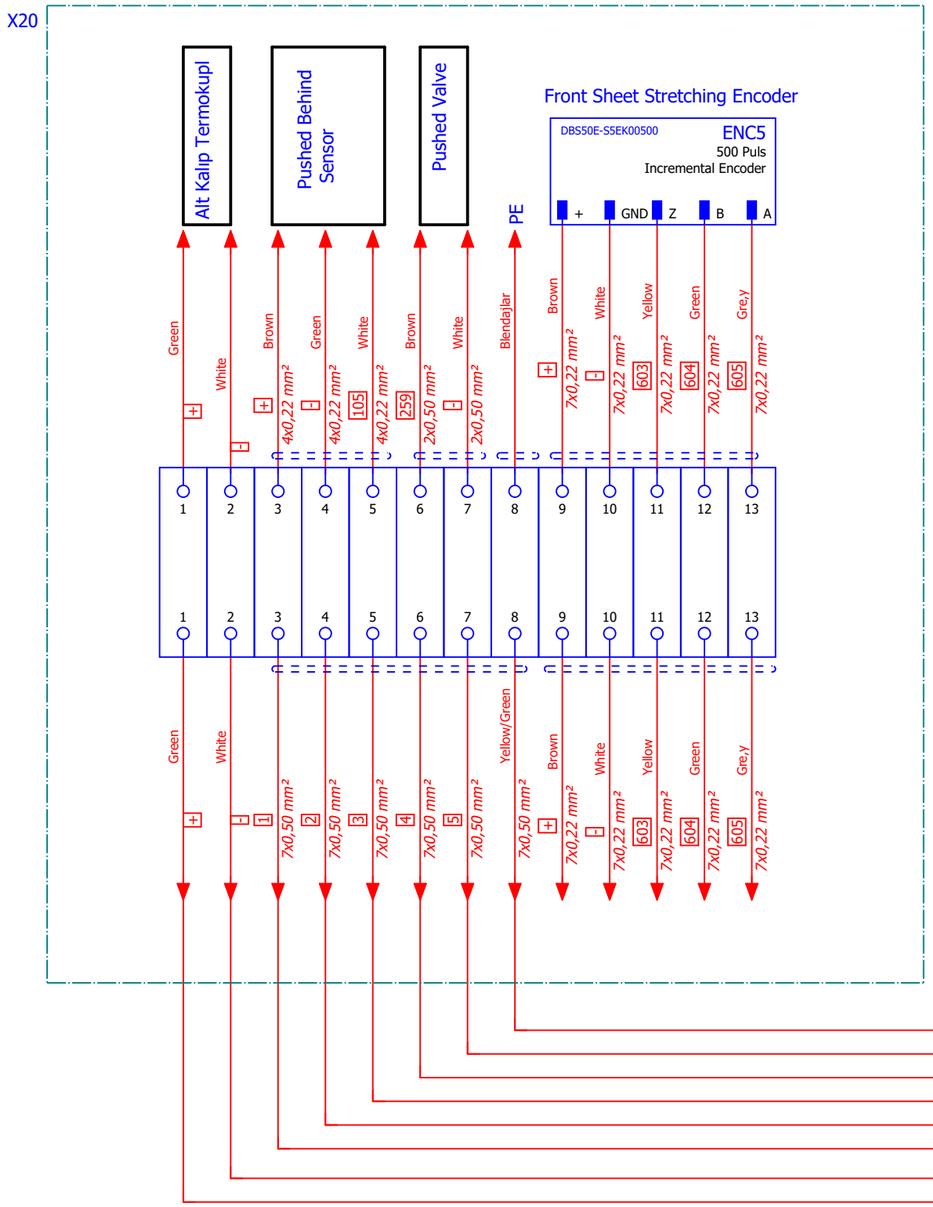

Lover Mold Front Junction Box

X31

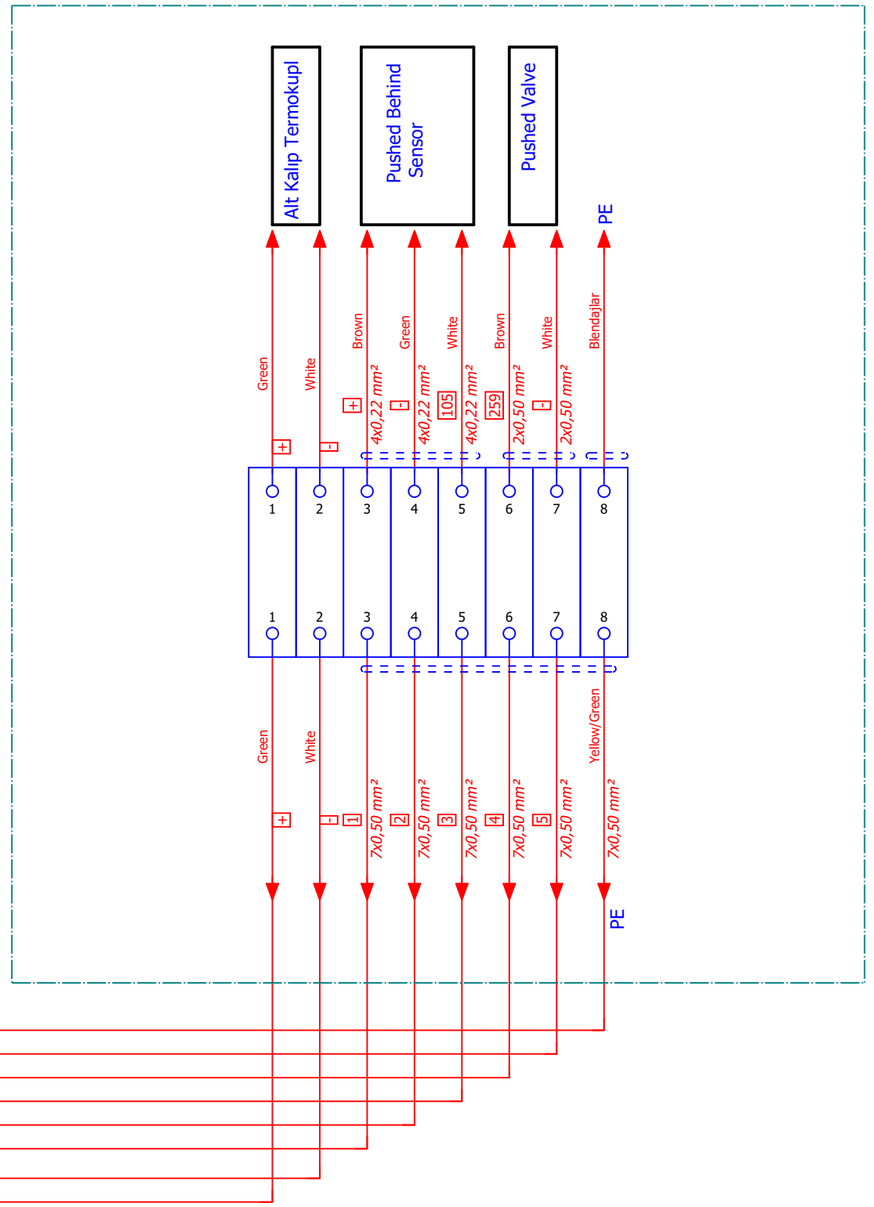

Project Version	v0.1	Author	OĞULCAN YILMAZ	GT FORM	**Güven Teknik Makina ve Kalıp Ind.Trade.Co.Ltd** Kavaklı Mah. Pamukova Sok. No:6 Silivri/İstanbul/Turkey +90 212 485 09 67 info@guventeknikmakina.com	**DEVIRMELI**	Junction Box Connection
Last Update	23/01/2026	Revision					Page : 37 /40

Main Encoder Junction Box

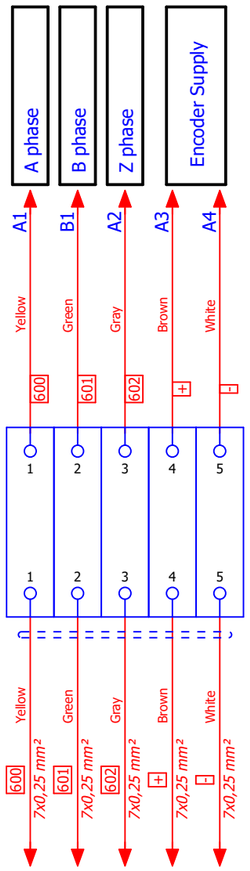

Rare Sheet Stretching Encoder

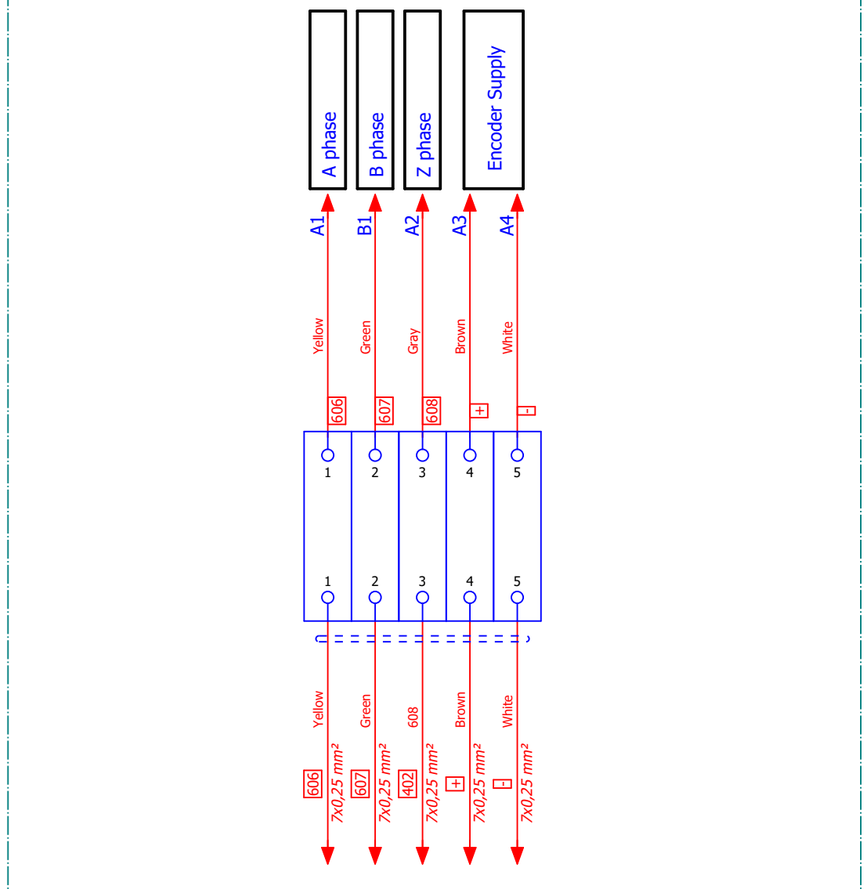

Project Version	v0.1	Author	OĞULCAN YILMAZ	GT FORM	**Güven Teknik Makina ve Kalıp Ind.Trade.Co.Ltd** Kavaklı Mah. Pamukova Sok. No:6 Silivri/İstanbul/Turkey +90 212 485 09 67 info@guventeknikmakina.com	**DEVIRMELI**	Junction Box Connection
Last Update	23/01/2026	Revision					Page : 38 /40

0	1	2	3	4	5	6	7	8	9

Waste Roller Section Button Box

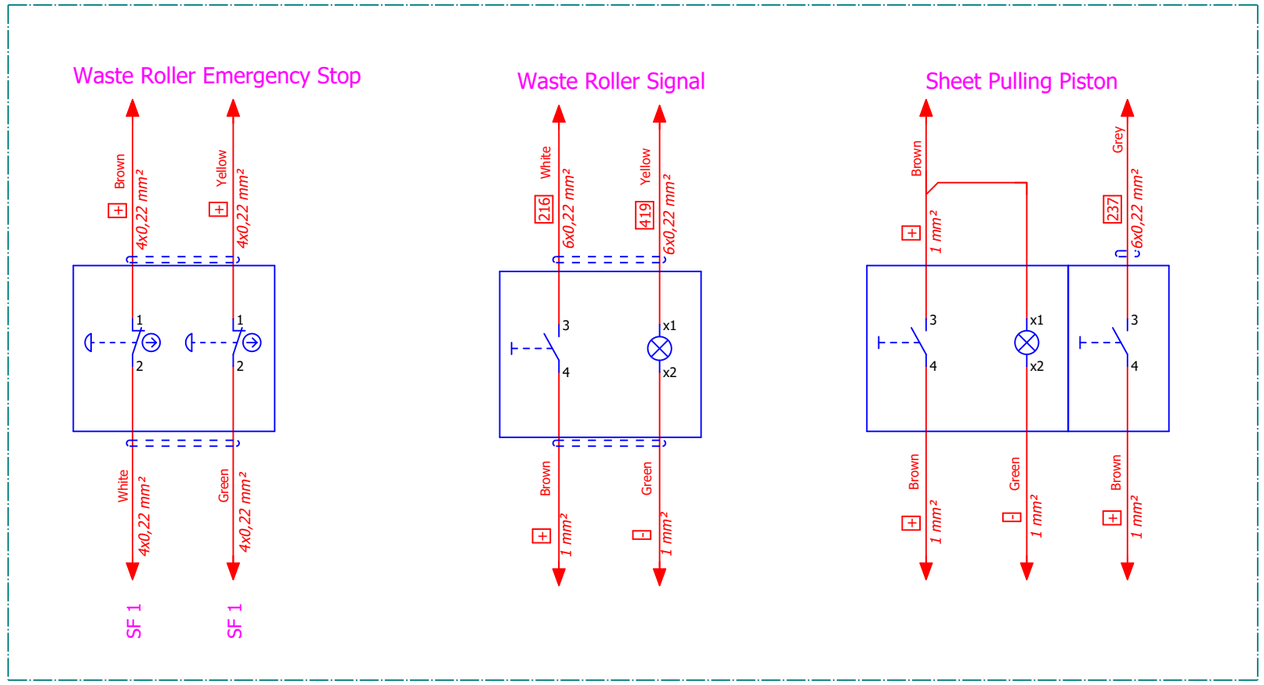

Machine Emergency Stop

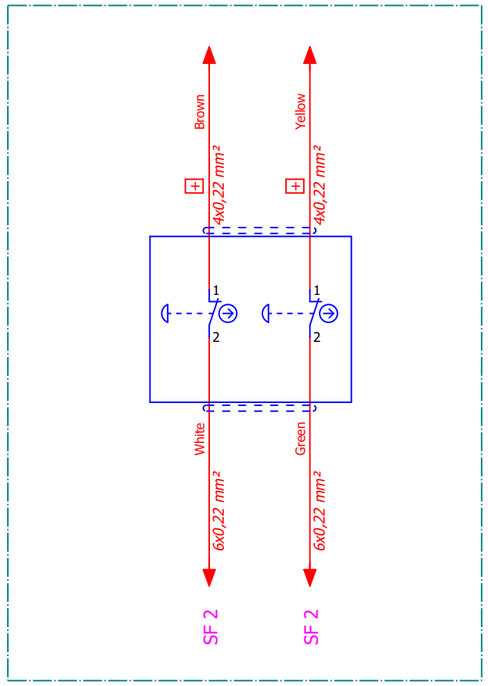

Unwinder Section Button Box

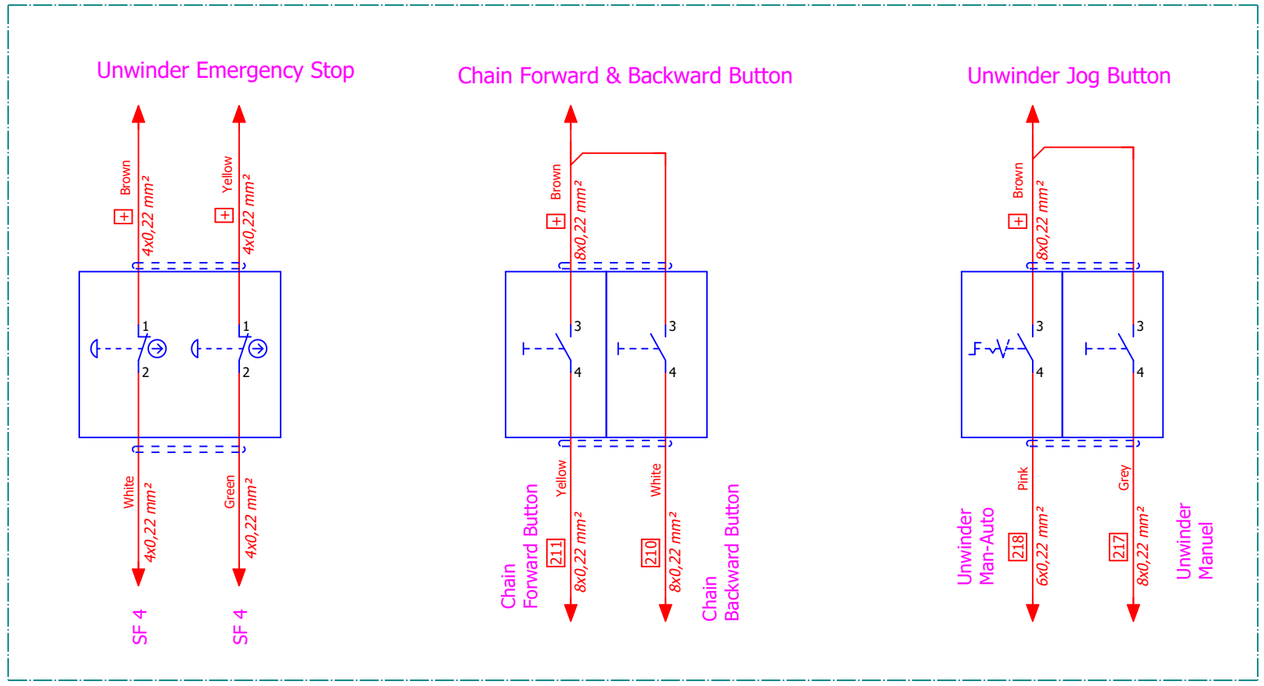

Project Version	v0.1	Author	OĞULCAN YILMAZ	GT FORM	**Güven Teknik Makina ve Kalıp Ind.Trade.Co.Ltd** Kavaklı Mah. Pamukova Sok. No:6 Silivri/İstanbul/Turkey +90 212 485 09 67 info@guventeknikmakina.com	**DEVIRMELI**	Button Box Connection
Last Update	23/01/2026	Revision					Page : 39 /40

0	1	2	3	4	5	6	7	8	9

Stacker Supply 6 Contact Connection

X10

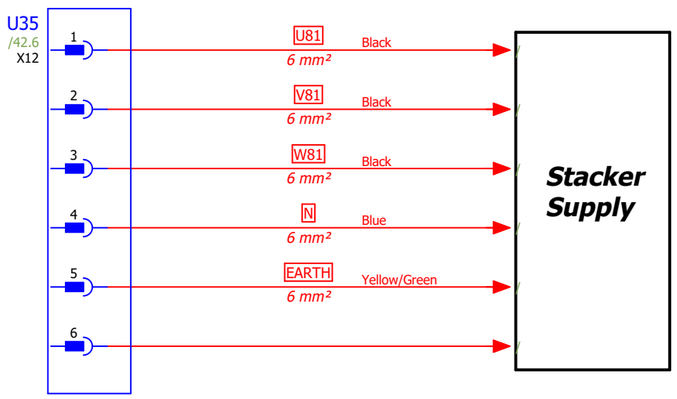

Unwinder Supply 6 Contact Connection

X20

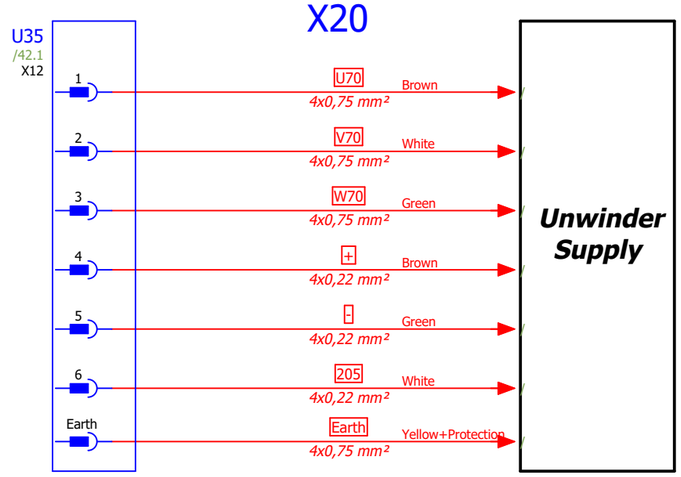

Project Version	v0.1	Author	OĞULCAN YILMAZ	GT FORM	**Güven Teknik Makina ve Kalıp Ind.Trade.Co.Ltd** Kavaklı Mah. Pamukova Sok. No:6 Silivri/İstanbul/Turkey +90 212 485 09 67 info@guventeknikmakina.com	**DEVIRMELI**	SOCKET CONNECTIONS
Last Update	23/01/2026	Revision					Page : 40 /40